Computation fluid dynamic analysis of horizontal axis pressure vessel

[1]Sumit.K.Gorule, [2]Shreyas Jadhav, [3]Tejas.V.Gurav, [4]P.L.Mane, [5]G.V.Wafelkar

[1,2,3]Students, [4, 5]Assistant Professor
Department of Automobile Engineering,
Rajendra Mane College of Engineering and Technology, Ratnagiri, India

***Abstract*— this research paper shows that some of the developments in the finding of stress concentration factor in horizontal pressure vessels at openings, stress analysis of different types of end connections and minimization stress with the help of optimize location and angle of nozzle on shell and head. The literature review gives growing interest in the field of stress concentration analysis in the pressure vessels. The motivation for this research is to analyze the stress concentration occurring at the openings of the pressure vessels and the means to reduce the effect of the same. The pressure vessel designed according to ASME Code. The code gives for thickness and stress of basic components, it is up to the designer to select appropriate analytical as procedure for determining stress due to other loadings. In this research work static structural analysis and CFD analysis is carried out by FEM software and also shows that magnitude of stresses by changing the nozzle location on shell body.**

***Index Terms*—PV Ellite, solid works, Ansys, ASME, pressure vessel etc.**

I. INTRODUCTION (HEADING 1)

A pressure vessel is a container design to hold gases or liquids at a pressure substantially different from the ambient pressure. Pressure vessel design, manufacture, and operation are regulated by engineering authorities backed by legislation, Normally Pressure vessels are designed and Fabricated as per ASME Sec VIII Div. I in Oil and Gas industry, Food and Pharmaceutical industry etc.[1]

Figure 1 Pressure vessel

II. PROBLEM DEFINATION

During working condition some cracks takes place parallel to vessel axis, such cracks occurred due to the failure of vessel because of circumferential stresses. So we should find out Minimum required thickness of vessel to withstand circumferential stress. Similarly cracks are also takes place to the perpendicular to vessel axis, such cracks occurred due to the failure of vessel because of longitudinal stresses. So we should find out minimum required thickness of vessel to withstand longitudinal stress. Problem can be defined as analysis of horizontal pressure vessel using FEM software to overcome these above said problems and comparison of stresses with different head types and also finding out optimum position of nozzle output on shell.

III. PV ELLITE SOFTWARE

PV Elite consists of nineteen modules for the design and analysis of pressure vessels and heat exchangers, and assessment of fitness for service. The software provides the mechanical engineer with easy-to-use, technically sound, well-documented reports. The reports contain detailed calculations and supporting comments that speed and simplify the task of vessel design, re-rating, or fitness for service. The popularity of PV Elite is a reflection of Intergraph CADWorx and Analysis Solutions' expertise in programming and engineering, and dedication to service and quality. Calculations in PV Elite are based on the latest editions of national codes such as the ASME Boiler and Pressure Vessel Code, or industry standards such as the Zick analysis method for horizontal drums. PV Elite offers exceptional ease of use that result in dramatic improvement in efficiency for both design and re-rating.

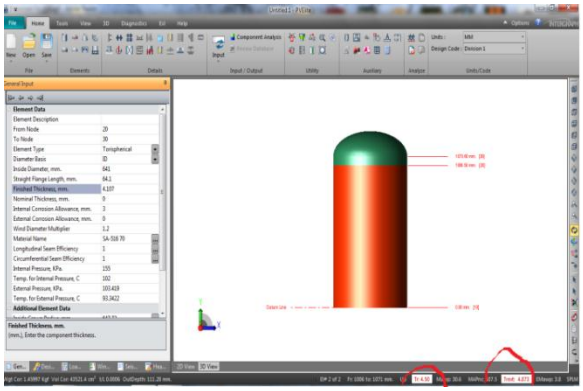

Figure.2 Hemispherical head

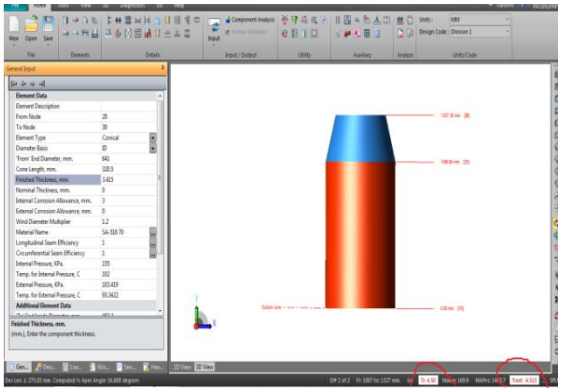

Figure.3 conical head

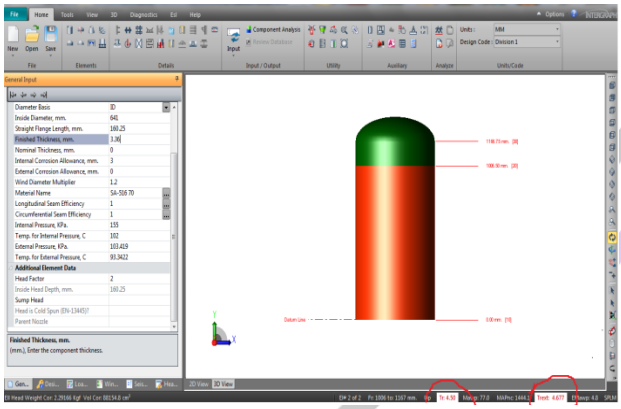

Figure.4 Elliptical head

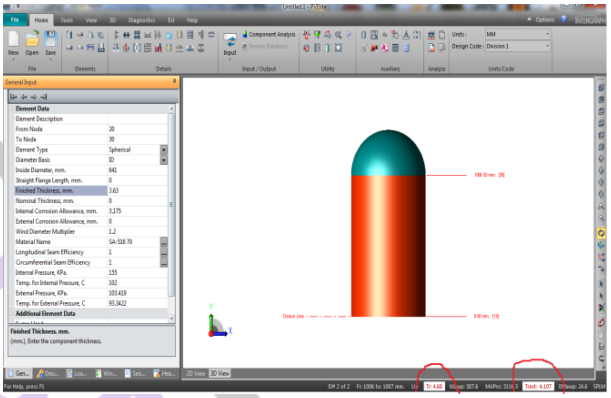

Figure.5 Tori-spherical head

The result of PV elite suggest the conclusion that the thickness is required for the pressure vessel for given condition is greater than analytical values and it is in the range of 4.5 to 5mm. Hence for further designing of CAD model on SolidWorks we have use the corrected thickness for each corresponding head and for further calculation will also be done on the basis of same thickness.

IV. STRUCTURAL ANALYSIS (ANSYS-2015)

ANSYS is a general purpose software, used to simulate interactions of all disciplines of physics, structural, vibration, fluid dynamics, heat transfer and electromagnetic for engineers. So ANSYS, which enables to simulate tests or working conditions, enables to test in virtual environment before manufacturing prototypes of products. Furthermore, determining and improving weak points, computing life and foreseeing probable problems are possible by 3D simulations in virtual environment.

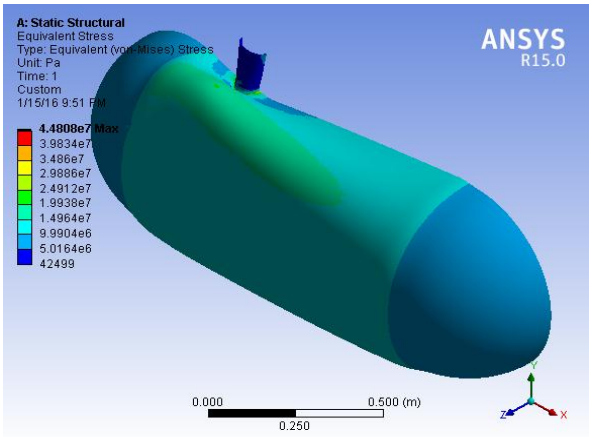

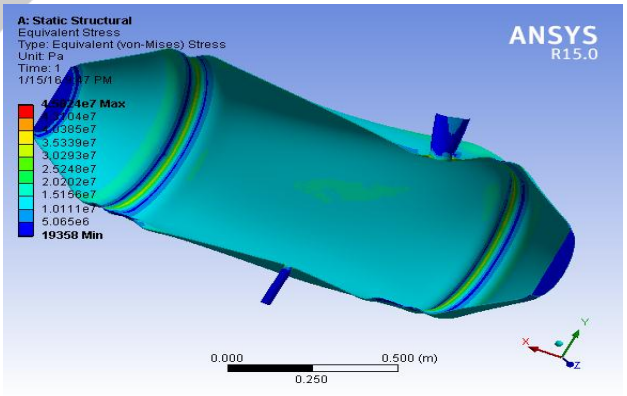

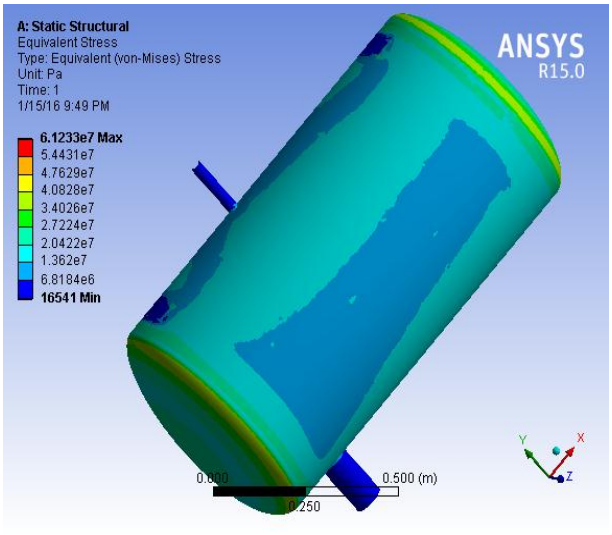

Figure 8 Elliptical head

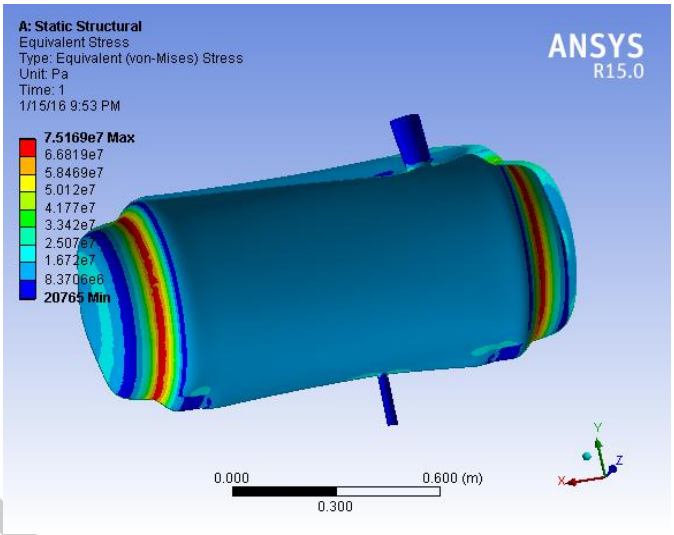

Figure 9 Tori-spherical head

Fluent flow analysis

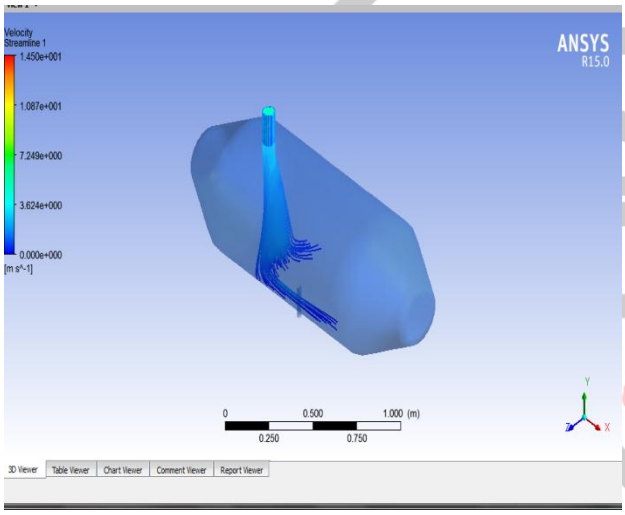

Figure 10 Conical Head

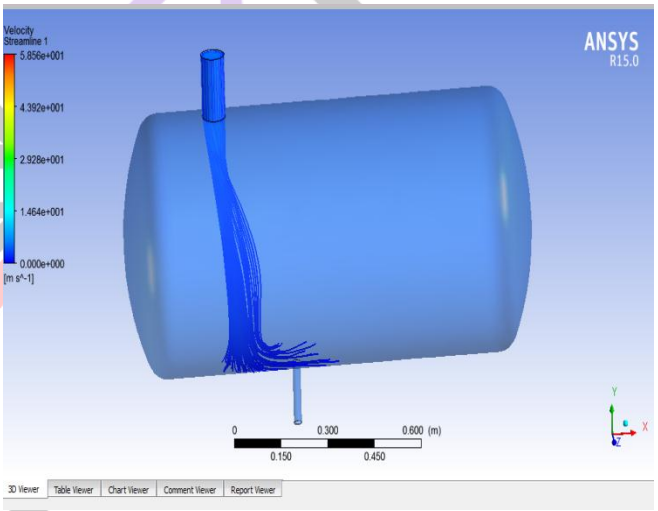

Figure 11 Tori-Spherical Head

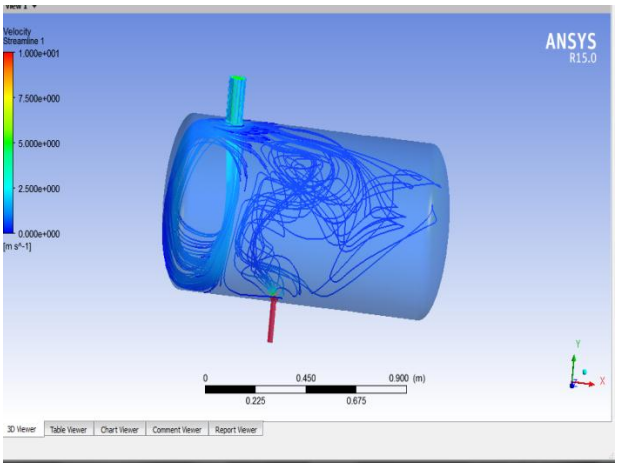

Figure 12 Elliptical Head

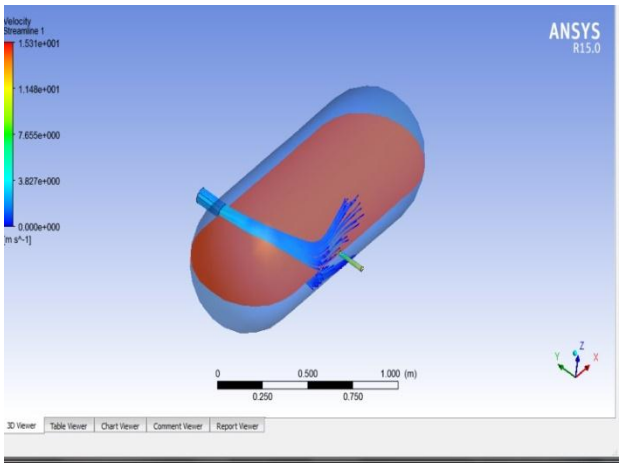

Figure 13 Hemi spherical head

Result obtain from static structural analysis suggest that all the four pressure vessel found to be safe design as their maximum stress is below the 138MPa which is maximum allowable stress as per ASME. Among all the four pressure vessel with different heads (i.e. elliptical, conical, hemispherical, tori-spherical) the pressure vessel with hemispherical head is found to be more optimum under same operating condition. It also concludes that the pressure vessel with tori-spherical head is comparatively poor among all four.

The fluent flow analysis suggest that the flow is uniform , the pressure and velocity of the flow is also found to be uniform just the little variation is found to be at the exit nozzle. At the output of flow there is increase in pressure as well as velocity of the flow. The output nozzle position should be change to find out the optimal design. Hence the further analysis is done by changing the output nozzle position (i.e. firstly on bottom center and secondly on bottom right).

V. ANALYTICAL CALCULATIONS

DESIGN PRESSURE INCLUDING STATIC HEAD;

Design pressure at top of the vessel = $1.54 Kg/cm^2$. (1)

Maximum Possible static head (H) = 635mm.

Density of contents (ρ) = (Specific gravity of contents) × (1000)

$= 0.683 \times 1000$

$= 683 Kg/m^3$.

Static Head $= \frac{(\text{Density of contents}) \times H}{1000}$.

$= \frac{683 \times 635}{1000}$.

$= 433.705 Kg/m^2$.

$= 0.043 Kg/cm^2$. (2)

Therefore, from eq. 1 and 2

Design pressure including static head= (Design Pressure)+(Static Head).

$= 1.54 + 0.043$.

$= 1.583 Kg/cm^3$ (3)

.

Cylindrical Shell Thickness For Internal Design Pressure As Per UG.27 (C);

Internal design pressure = $1.58\ Kg/cm^2$

$= 0.0980665 \times 1.58$

$= 1.55$ MPa

Material Designation = SA 516 GR70

Maximum Allowable Stress From Stress Table = 138 MPa

Inside Radius = 317.50 mm

Corrosion Allowance (c) = 3

Therefore, internal radius = 317.50 + 3

= 320.5 mm

For Circumferential Stress ,

$$t = \frac{PR}{(SE - 0.6P)}$$

$$= \frac{0.155 \times 320.5}{(138 \times 1 - 0.6 \times 0.155)}$$

$$= 0.361 \text{ mm} \quad (4)$$

For Longitudinal Stress ,

$$t = \frac{PR}{2SE+0.4P}$$
$$= \frac{0.155\times320.5}{(2\times138\times1)+(0.4\times0.155)}$$
$$= 0.18 \text{ mm} \quad (5)$$

Taking Largest Value From eq. (4) & (5)

t_s= 0.36 mm

Considering Corrosion Allowance

t_s = 0.36+3

t_s =3.36 mm

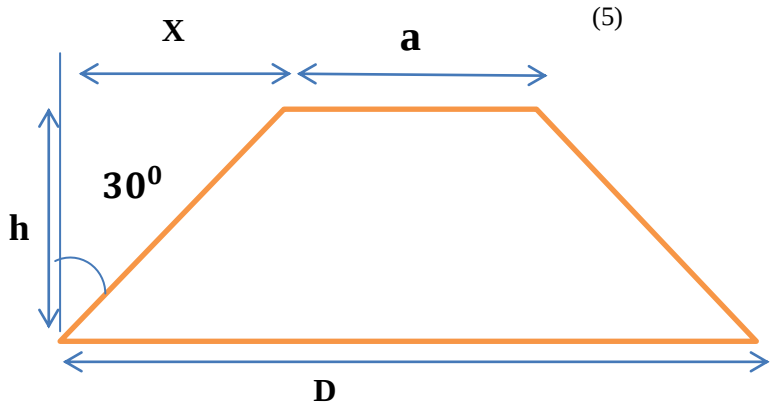

Figure 14 Cone

Design of Conical Head;

Considering R = h

a =D - 2x

$\frac{x}{h}$ = tan 30

tan 30 × h = x

x = 185.04 mm

a =641 – 2 × 185.04

a =270.92 mm

Design of Elliptical Head;

As ellipse used is 2:1 Elliptical head

Therefore, $R_2 = \frac{R}{2}$

$$R_2 = \frac{D}{4} = \frac{641}{4} = 160.25\text{mm}$$

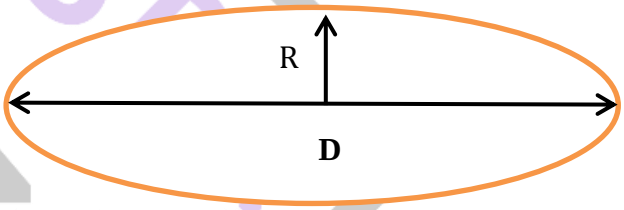

Figure 15 ellipse

Design of Hemi-Spherical Head

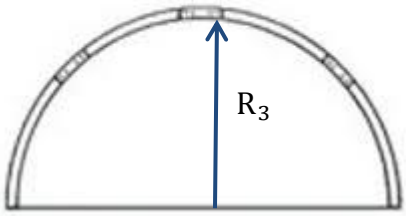

Figure 16 Hemisphere

$$R_3 = \frac{D}{2} = \frac{641}{2} = 320.5\text{mm}$$

Design of Tori-Spherical

Crown radius (C.R) = (same as D)

= 641mm

Knuckle radius (K.R) = (6% to 10% of D)

= 64.1 mm

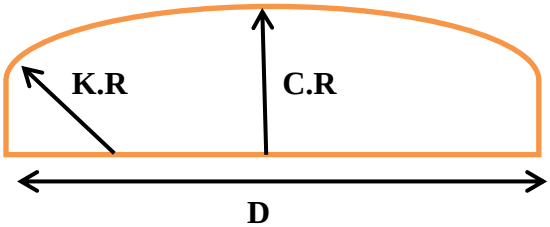

Figure 17 Tori sphere

Thickness of Elliptical Head

$$t_e = \frac{PD}{2SE-0.2P}$$

$$= \frac{0.155\times641}{(2\times138\times1)-(0.2\times0.155)}$$

t_e = 0.36 m

Considering Corrosion Allowance

= 0.36+3

t_e = 3.36 mm

Thickness of Tori-spherical Head

$$t_{ts} = \frac{0.885PL}{SE-0.1P}$$

$$= \frac{0.885\times0.155\times1113.63}{(138\times1)-(0.1\times0.155)}$$

t_{ts} = 1.107 mm

Considering Corrosion Allowance

= 1.107 + 3

t_{ts} = 4.107 mm

Thickness of Hemispherical Head

$$t_{hs} = \frac{PL}{2SE-0.2P}$$

$$= \frac{0.155\times1113.63}{(2\times138\times1)-0.2\times0.155}$$

t_{hs} = 0.63

Considering Corrosion Allowance

= 0.63+3

t_{hs} = 3.63mm

Thickness of Conical Head

$$t_c = \frac{PD}{2\cos\alpha(SE-0.6)}$$

$$= \frac{0.155\times641}{2\cos30(138\times1-0.6\times0.155)}$$

= 0.415 mm

Considering Corrosion Allowance

$t_{c = 0.415+3}$

=3.0415 mm

Calculation for stress:

For Conical head

$$t_c\text{-}c = \frac{PD}{2\cos\alpha(SE-0.6P)}$$

$$4.153\text{-}3 = \frac{0.155\times641}{2\cos30(S\times1-0.6\times0.155)}$$

S = 38.006MPa (6)

For Tori-spherical head

t_{ts} = 4.873 ≈ 5mm

$$t_{ts} - c = \frac{0.885PL}{SE-0.1P}$$

$$5\text{-}3 = \frac{0.885\times0.155\times1113.63}{S\times1-0.1\times0.155}$$

S = 76.39MPa (7)

For Elliptical head

$$t_e - c = \frac{PD}{2SE-0.2P}$$

$$4.677\text{-}3 = \frac{0.155\times641}{(2\times S\times1)-(0.2\times0.155)}$$

S = 55.21MPa (8)

For Hemi-spherical head

t_{hs} = 4.107≈5mm

$$t_{hs} - 3 = \frac{PL}{2SE-0.2P}$$

$$5\text{-}3 = \frac{0.155\times1113.63}{(2\times S\times1)-0.2\times0.155}$$

$$S = 43.16\text{MPa} \qquad (9)$$

VI. RESULT OF CHANGED NOZZLE POSITION

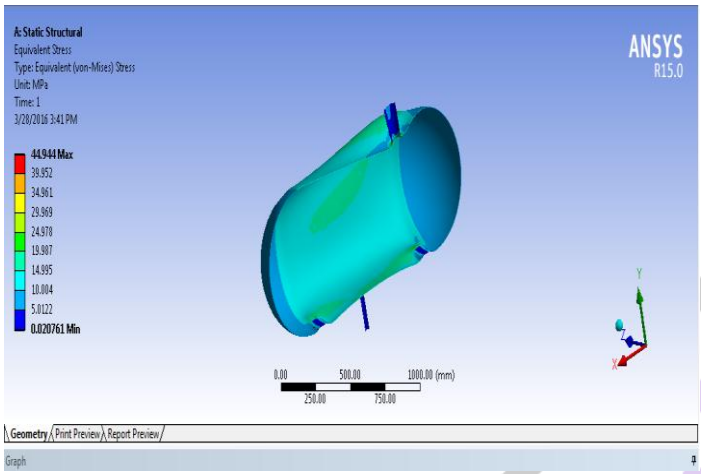

Figure 18 Right bottom position of output nozzle

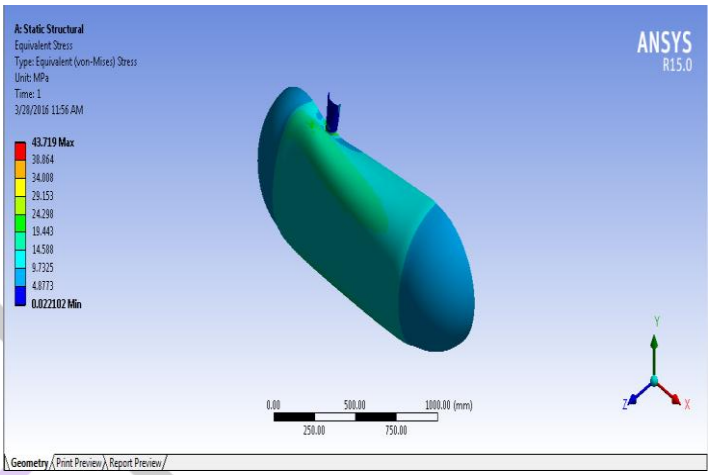

Figure 19 Bottom center position of output nozzle

VII. RESULTS AND DISCUSSION

Table No 1 Comparison of result of analytical calculation and static structural analysis

Sr. no	Head types	Analytical result of stress (MPa)	Computational result of Stress (MPa)
1.	Conical	38.006	45.82
2.	Tori-spherical	76.39	75.169
3.	Elliptical	55.21	61
4.	Hemispherical	43.16	44

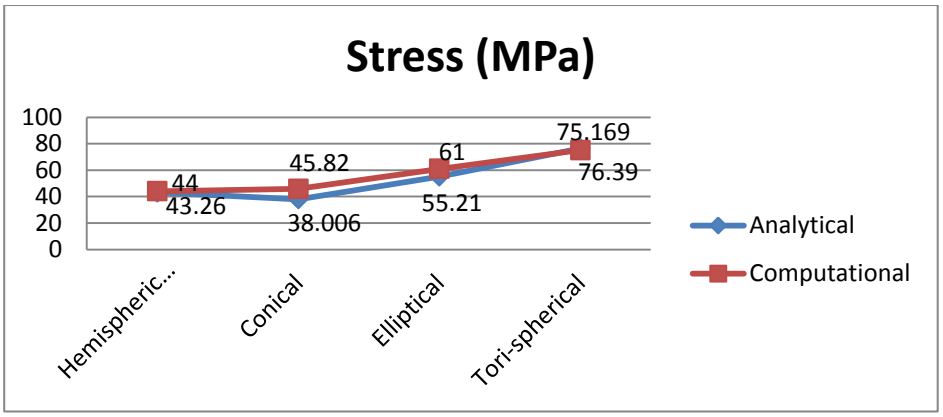

Graph No 1 Comparison of result of analytical calculation and static structural analysis

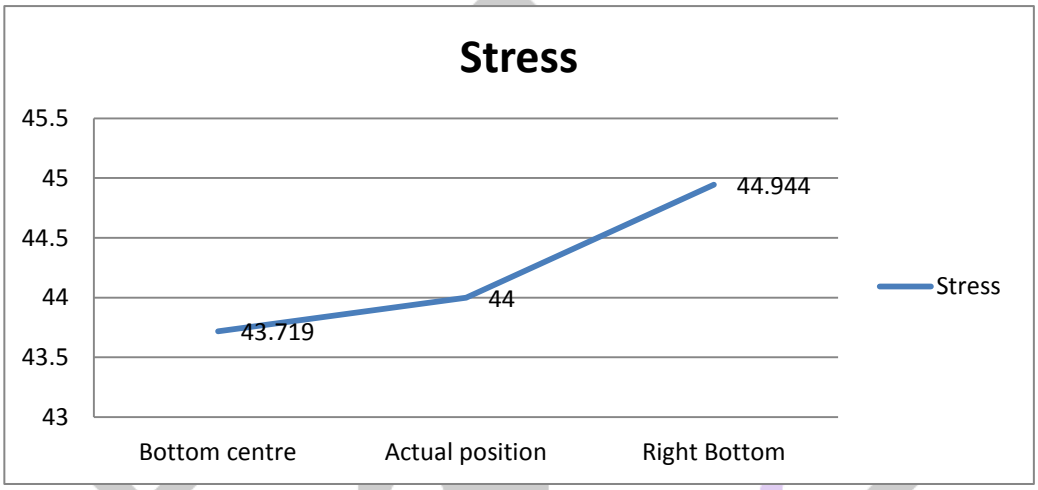

Graph No 2 Comparison of stress concentration with different nozzle location

From the Table No 1 and the Graph No 1 shown above, it is concluded that the analytical and theoretical values are found to be much similar in each case of pressure vessel head. The stress obtain from both analytical and experimental is found to be safe as it is under 138MPa as per ASME. . Among all the four pressure vessel with different heads (i.e elliptical, conical, hemispherical, tori-spherical) the pressure vessel with hemispherical head is found to be more optimum under same operating condition. It also concluded that the pressure vessel with tori-spherical head is comparatively poor among all four. The fluent flow analysis suggest that the flow is uniform , the pressure and velocity of the flow is also found to be uniform just the little variation is found to be at the exit nozzle. At the output of flow there is increase in pressure as well as velocity of the flow. The output nozzle position should be change to find out the optimal design. Hence the further analysis is done by changing the output nozzle position (i.e. firstly on bottom center and secondly on bottom right). The output nozzle position is changed of pressure vessel with hemispherical head as it was the one of the optimal design. After the static structural analysis of changed nozzle position and form the above Graph No 2 it is found that the , pressure vessel with output nozzle at the bottom center is optimal as compare to other to position.

VIII. CONCLUSION

Objective of our project was to perform static structural analysis on horizontal pressure vessel and find maximum stress areas and also performing CFD analysis to check the flow path for maximum pressure area.

Static structural analysis is carried out to show that stress magnitude of pressure vessels exposed to internal pressure by varying the end heads and nozzle location. Here PVElite software is used for designing of pressure vessel, from this we get the appropriate thickness of head and shell for further investigation. According to the output of PVEllite software we get 4.5mm as appropriate thickness for both shell and heads of pressure vessel for given operating pressure condition. Stress concentration is one of the important factors to be studied in the pressure vessel opening. Further on performing analysis of CAD models prepared using SolidWorks software we found that the pressure vessel with hemi-spherical is shows mini stress concentration as compare to all others heads used for pressure vessel in same operating condition. At the same time we also observe the pressure vessel with

tori-spherical heads shows maximum stress concentration compare to rest at same operating temperature. The result of analytical calculation is found to nearly equal to result obtain from Ansys for all corresponding cases. The result of CFD analysis show that at given operating pressure condition the pressure found to be uniform just the variation observed at the opening of output nozzle. For this given operating pressure conditions we observed that the location of the output nozzle at the bottom center orientation results for minimum stress concentration.

REFERENCES

[1] P.L. Mane, V. Murali Mohan, "Design of Horizontal Pressure Vessel for Vacuum System Drain Collector Receiver", International Journal for Scientific Research & Development, Vol. 3, Issue 09, 2015.

[2] B.S. Thakkar, S.A. Thakkar, "Design Of Pressure Vessel Using Asme Code, Section VIII Division 1",International Journal Of Advanced Engineering Research And Studies ,Vol I , Pp 228-234,(2012).

[3] O.Drazan Kozak, Ivan Samardzic, "Stress Analysis Of Cylindrical Vessel With Changeable Head Geometry," Science Bulletin, Serie C, Vol. XXIII.

[4] P.Yogesh Borse, Avadesh Sharma, "Modeling Of Pressure Vessel With Different End Connections Using Pro-Mechanical", International Journal Of Engineering Research And Application, Vol. 2, Pp 1493-1497.

[5] Z.Modi A J, Jadav C.S, "Structural Analysis Of Different Geometry Heads For Pressure Vessel Using Ansys Multiphysiscs", The 5th International Conference On Advance In Mechanical Engineering. 2011.

[6] M.Shaik Abdul Lathuef, Chandra Sekhar, "Design and Structural Analysis Of Pressure Vessel Due To Change Of Nozzle Location And Shell Thickness", International Journal of Advanced Engineering Research and Studies, Vol. I, Pp 218-221, 2012.

[7] Shyam R. Gupta, Chetan P. Vora, " A Review Paper on Pressure Vessel Design and

[8] Analysis" International Journal of Engineering Research & Technology, Vol. 3 Issue 3, March – 2014.