A REVIEW ON AUTOMATED HOMES USING WSN TECHNOLOGY BASED ON LabVIEW

Shikha Singh

Assistant Professor,
EEE Department, IITE-Indus University, Ahmedabad, India

***Abstract*—With the recent advancements in technology, the demand for home automation system is increasing day by day. Using wireless sensors, we can implement different techniques so as to make our home intelligent. We can monitor and control the various appliances status such as of fan, light, fire, security alarm to prohibit intruder in homes and the temperature of the home. In addition to this, using ARM controller, energy conservation in homes can also be achieved by monitoring and controlling the energy consumption by each appliance. This paper presents the review analysis of the techniques based on LabVIEW to make our homes smart, using wireless sensor network system, by controlling the on-off status of appliances and thus, thereby conserving the energy.**

***IndexTerms*—WSN,LabVIEW,Home Automation System**

I. INTRODUCTION

Automated Homes/Smart Homes with an efficient energy conservation techniques,comfort and safety is a requisite for today's world.With the implementation of sensors, we can minimize the unwanted working of appliances, thereby reducing the energy consumption.Thus,reducing the energy cost of the home and also the maintenance cost of the appliances.In this paper, different design techniques are introduced , based on wireless sensor network system, so as to control and monitor the home from any remote location via internet.

In one of the technique, different types of sensors such as temperature sensor , IR sensors,PIR sensors are connected to analog input node which is again connected to Ethernet gateway via wireless connection. The second technique describes the management of energy in home by collecting the data from input nodes using the serial communication to LabVIEW module running on LabVIEW based workstation.ARM microcontroller is used to control the on-off condition of the appliances.

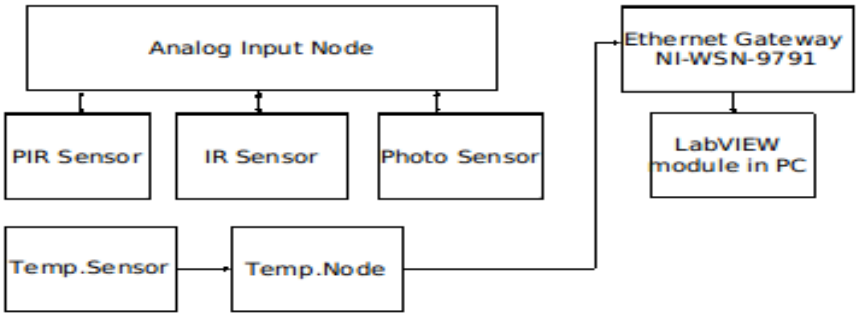

Fig.1(a):- Design of Automated Home using Technique 1.

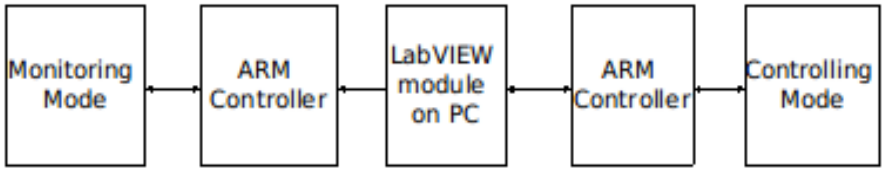

Fig.1(b) Design of Automated Homes using Technique 2.

II.SYSTEM DESCRIPTION

1. Designing of Smart Homes Using Technique 1:-

A) Hardware Requirements:-

In this technique, National Instruments Wireless Starter Network NI-WSN-9791 Ethernet Gateway is used. In addition to this, NI-WSN-3212 programmable thermocouple node and NI-WSN-3202 programmable analog input node which has the range of ±10 V is used and are shown below respectively.

Figure 2 NI-WSN-9791 Ethernet Gateway

Figure 3 NI-WSN-3202 programmable analog input node.

Figure 4 NI-WSN-3212 Programmable thermocouple node.

PC running Windows Vista/XP OS is required by the NI WSN Starter Kit so as to act as the host controller in the system. We can connect any thermocouple node to NI-WSN-3212 programmable node and on each node the TTL outputs are also available which is used to control the appliances or to give alarm indication for intruder entry in the home. The other hardware requirements of the system includes: Intel Core Duo Processor, 1GB of RAM, Ethernet NIC and LabVIEW 8.6 or higher installed on the PC.

B)Software Requirements:-

While designing smart homes, NI LabVIEW software is used which provides platform for creating custom applications and which interact with real-world data or signals in different fields such as science and engineering. Hardware devices such as : Scientific instruments, Data acquisition devices, Sensors, Cameras, Motors and actuators are supported by LabVIEW software. The powerful optimizing compiler of LabVIEW examines the block diagram of the smart homes and directly generates efficient machine code. Different segments of code can be recognized by the compiler. Along with this, it automatically split the application into multiple threads which can run in parallel on multicore processor. Thus, resulting in significantly faster analysis and more responsive control.

2. Designing of Smart Homes Using Technique 2:-

In this design, Monitoring and controlling mode are the important blocks. The reading of the energy consumed by the electrical appliances and the status of each node which are connected to a relay board is monitored by monitoring mode through the power module (ACS712) and the data measured is provided as an input to the ARM controller which is then displayed in LabVIEW .The fully integrated power module is a Hall Effect-Based Linear Current Sensor IC with Low-Resistance Current and 2.1 kVRMS Isolation. On the other hand, the control mode controls the nodes based on the output from the sensor and the status of the node indicated by the LabVIEW software.The different nodes with an individual IP address are linked through Ethernet and are automatically controlled through LabVIEW.The electrical appliance is controlled in controlling mode by mbed controller NXP LPC1768through LabVIEW. PIR SENSOR-08630 is also used in controlling mode which is used to detect human intervention. The output of the PIR Sensor is given to mbed controller NXP LPC1768 .In the absence of human activity, the device that is ON will be automatically switched OFF using LabVIEW, if the energy consumption is prompted. 6LoWPAN protocol is used for effective communication among the nodes and which can be visualized using the software Contiki.The main advantage of 6LoWPAN technology is that it compresses the header and works on the principle of flataddress spaces with unique MAC addresses.The proposed system can also be implemented in conjunction with RTOS.

III.IMPLEMENTATION OF AUTOMATED HOME SYSTEM

1.Implementation of smart homes using Technique 1:-

The security system, lighting and fan control system in the automated home model is controlled through LabVIEW software. With wireless control and LabVIEW software, the different systems in the smart home is monitored and through front panel and

thus controlled.The front panel is designed to monitor all the systems(security, light and fan control) of smart home connected with LabVIEW software via WSN Kit of national instruments shown in figure 5.

A) Security System:-

In order to detect the intruder, infrared sensor ,fitted on the sides of the window is used in the security system. Whenever any person tries to enter from the window, the system will give alarm. The logic behind the system is that the when the person is detected at the window side, sensor will transmit the pulse to the node connected to Ethernet gateway.

B) Lighting and Fan Control System:-

Light dependent resistors and PIR motion sensor are used in lighting system to sense the light and to detect the movement of a person inside the room.Depending upon the light intensity in the room, the system will automatically turn on or off the lights accordingly. With the help of LabVIEW software, the user can monitor the light intensity and the movement of a person on the front panel shown in fig.5.In case of fan control system, PIR motion sensor and temperature sensor are used.Temperature sensor will sense the temperature, whenever someone enters in the room and accordingly turn on or off the fan.PIR motion sensor will give the alarm whenever it detects the movement of the person.

For successful operation of the system, it is very critical and mandatory to maintain the quality of the wireless connection between the nodes and the Ethernet gateway.Weak signal quality may result in data loss or poor communication.Front panel is used to display the status of the signal quality.In order to have a good communication, the effective range of the nodes for this model is 300 m outdoors and 90 m indoors.

Figure5 Front Panel of Smart Home

2.Implementation of smart homes using Technique 2:-

In this technique, each light and fan is connected to mbed controller with an specific IP address.These mbed controller is connected to PC using Ethernet gateway. Through PIR motion sensor, the movement of the person is detected and the data is sent to the LabVIEW through the ARM controller.In human absence, if any appliance has left ON, the sensor will transmit the signal accordingly to the LabVIEW software via node and thus the appliance will get turn OFF. The LabVIEW 12 is used for this design model.

The Power monitoring module ACS712 is used to measure the energy consumed by the appliances. The corresponding data is displayed in LabVIEW through mbed controller NXP LPC1768. The front panel for monitoring of single node is shown in figure 6.

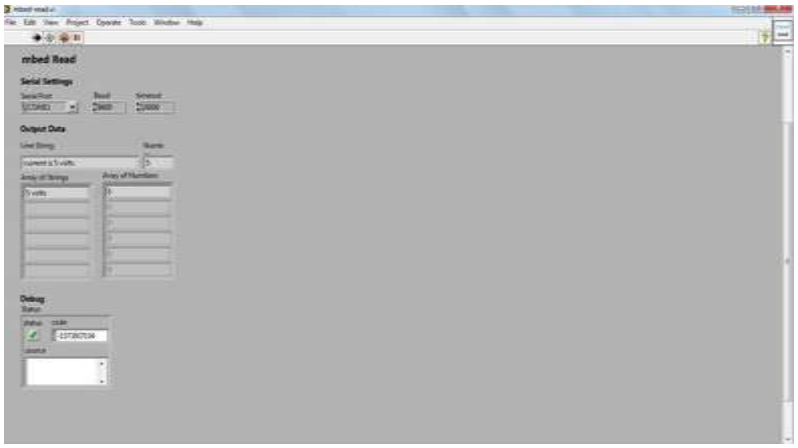

Figure-6. Showing monitoring of one node using LabVIEW.

IV.CONCLUSION

This paper aims on the techniques involved in monitoring and controlling of different systems such as light, fan and security system for automated homes.Using LabVIEW software and wireless sensor network , we can control the different systems in our homes from any remote location. In addition to this, energy saving can also be achieved by controlling the on and off status of appliances.However, strong signal quality/signal link should be achieved between the nodes and Ethernet gateway for effective communication.

REFERENCES

[1] J. Y. Chang, J. Y. Kim and O. Kwon. 2009. DemoAbstract: Control City - Integrating Wireless SensorNetworks and Building Management Systems.Proceedings of the 2009International Conference onInformation Processing in Sensor Networks. SanFrancisco, February. pp. 421-422.

[2] Basil Hamed," Design and Implementation of smart house control using LabVIEW", International Journal of Soft Computing and Engineering (IJSCE) ISSN: 2231-2307, Volume-1, Issue-6, January 2012

[3] A.J. Dinusha Rathnayaka, Vidyasagar M. PotdarSamitha J. Kuruppu. 2011. Evaluation of WirelessHome Automation Technologies. 5th IEEEInternational Conference on Digital Ecosystems andTechnologies (IEEE DEST 2011), Daejeon, Korea.

[4] Chetana Sarode, Prof.Mr.H.S.Thakar ," Intelligent Home monitoring system" , International Journal of Engineering Research and Applications (IJERA) ISSN: 2248-9622 www.ijera.com Vol. 3, Issue 1, January -February 2013, pp.1446-1450.

[5] Kim Baraka, Marc Ghobril, Sami Malek, Rouwaida Kanj, Ayman Kayssi. 2013. Low cost Arduino/Android-based Energy-Efficient Home Automation System with Smart Task Scheduling. Fifth International Conference on Computational Intelligence, Communication Systems and Networks.

[6] G.RAGHAVENDRAN," SMS BASED WIRELSS HOME APPLIANCE CONTROL SYSTEM, 2011 International Conference on Life Science and Technology IPCBEE vol.3 (2011) © (2011) IACSIT Press, Singapore.

[7] LabVIEW User Manual, April 2003 Edition, National Instruments.

[8] W. S. Jang and W. M. Healy. 2010. Wireless SensorNetwork Performance Metrics for BuildingApplications. Energy and Buildings. 42(6): 862-868.