LINEAR STATIC ANALYSIS OF AIRCRAFT WING BOX AND BUCKLING LOAD CARRYING CAPABILITY OF TOP SKIN PANELS

[1]Veeresh Gachchinamath, [2]Manjunath Vatnalmath
Assistant Professor
Department of Mechanical Engineering
HMS Institute of Technology, Tumakuru, Karnataka, India

***Abstract*—Aircraft is a complex structure with flying capability. Major Components of an aircraft (like wing, fuselage, tail surfaces etc) are of semi-monocoque construction. A thin skin which is seen from outside is reinforced by stiffeners in two orthogonal directions which carries the major distributed load on the aircraft. This study is on a single seater aircraft wing box with two spars and multiple ribs. This investigation is conducted on a simple box-beam wing structure subjected to bending loads. A buckling analysis of the wing top skin panels is carried out under the action of axial compression by employing an appropriate interaction equation to estimate the margin of safety against buckling. Finite element analysis is carried out using NASTRAN.**

***Key words*— Aircraft, buckling, semi-monocoque, stiffeners, wing box, Finite element analysis, NASTRAN**

I. INTRODUCTION

The Aircraft frame while in flight will subject to bending, torsional and shear loads. In the aircraft wing the top cover is subjected to axial compressive stress due to bending and shear stresses due to shear force and torsional moment. The principle failure mode of the wing is buckling under static loading. The wing skin panels (between ribs and stringers) starts buckling under small bending loads which eventually leads to failure of the wing as the applied bending moment reaches the design ultimate value. For the design of an aircraft structure, structural safety with minimum weight is the major criterion, which comprise thin load bearing skins, frames, stiffeners, spars, made of light weight, high strength, high stiffness materials. Wing is the important structural unit of an aircraft and it is going to bend during flying due to lift load acting in it. Hence bottom wing skin subjected to tensile load and top wing skin is under compression. The largest forces on the wings occur when the plane is airborne. Since the wings must then support the whole weight of the aircraft the steady stresses are high, and with the wings bending upwards, so that the upper surfaces are in compression and the underside in tension. Due to this compressive force the maximum compressive stress concentration is found on the top wing skin of the aircraft.

The safety of the structure due to buckling is calculated by a factor known as buckling factor which is the safety factor of the structure against buckling. Buckling factor is the ratio of Crippling or buckling load to the applied load. Crippling load is the load at which buckling begins. If the buckling factor is more than one, then the structure is said to be safe [6] i.e. for a structure to be safe from buckling failure, the buckling or the crippling stress must be greater than the applied stress. In the present study, Finite Element method is used for stress prediction and structural optimization which synthesizes complicated structural systems as a connected collection of objects, called finite elements that embody local physical laws. The aircraft wing-box structure considered in the present study is composed mainly of integrated skin-stringer panels, spars, and wing ribs shown in figure 1.

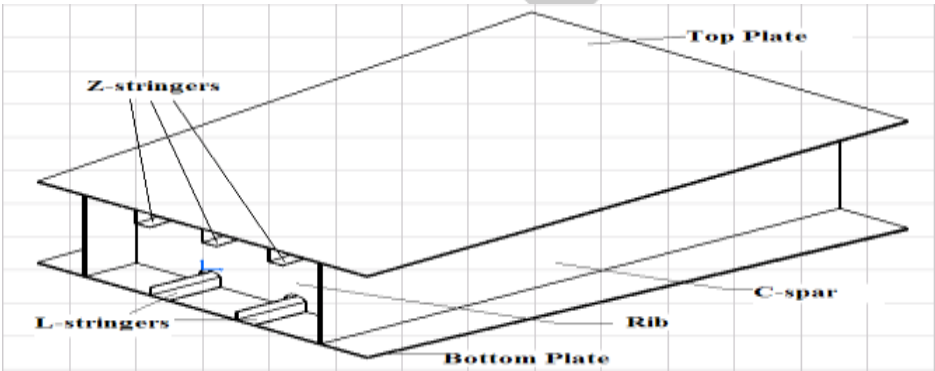

Fig.1 Different parts of a wing box

The design of skin-stringer panels forms an important and major portion of the wing-box design. Depending on their location, stiffened panels are mainly loaded in compression and in tension. Upper panels are subjected to compressive load while the lower panels are subjected to tensile load.

II. Description of Wing Box

This section would give the outline of the Wing box geometry, Material and Load conditions.

A. Geometrical Configuration

The wing box consists of five ribs, three Z-sections and two L-section stiffeners, two C-section spars, top and bottom skin, all connected together as an integrated model. The Dimensional view of the wing box is shown in figure 2. All dimensions are expressed in millimeters. Modeling has been done using CATIA V5, it is as shown in the figure 3.

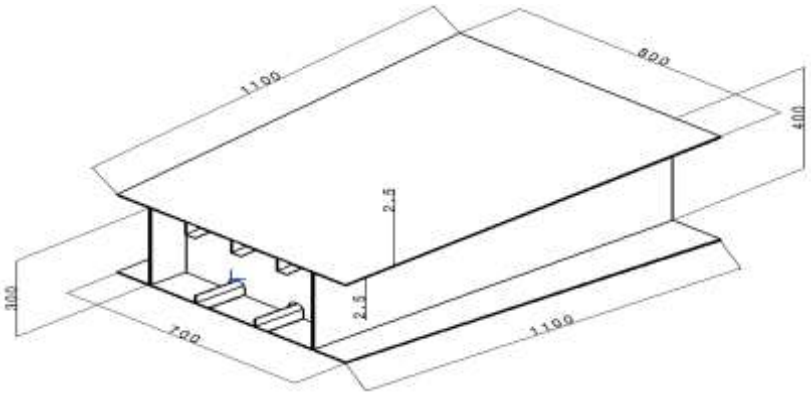

Fig.2 Wing Box Dimensions (in mm)

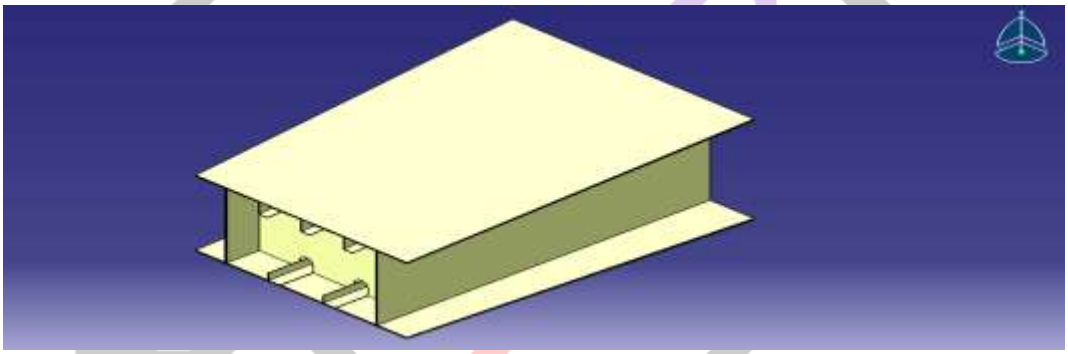

Fig.3 Solid model of wing box

Arrangement of ribs and stringers in a wing box and their dimensional details are shown figure 4, 5 respectively. The dimension of C-section spar and complete wire frame model is shown in figure 6 and 7 respectively.

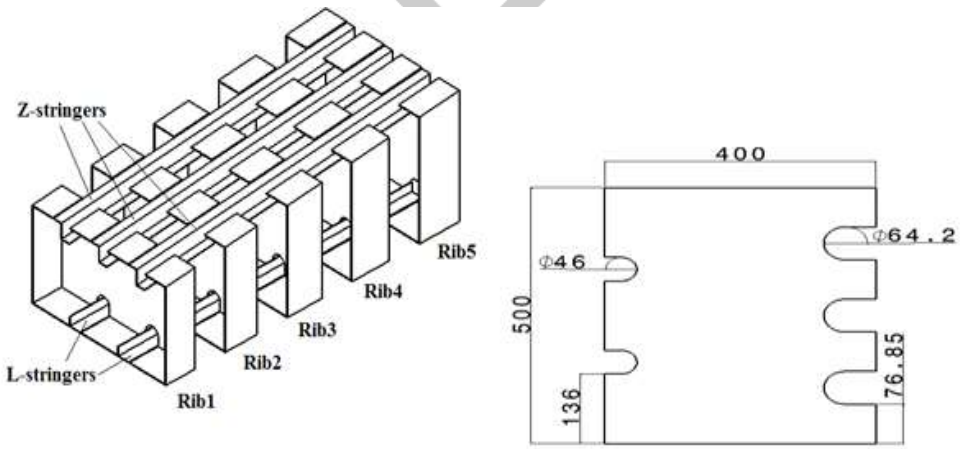

Fig.4 Arrangement of ribs and Stringers in a wing box and dimension of one rib (in mm)

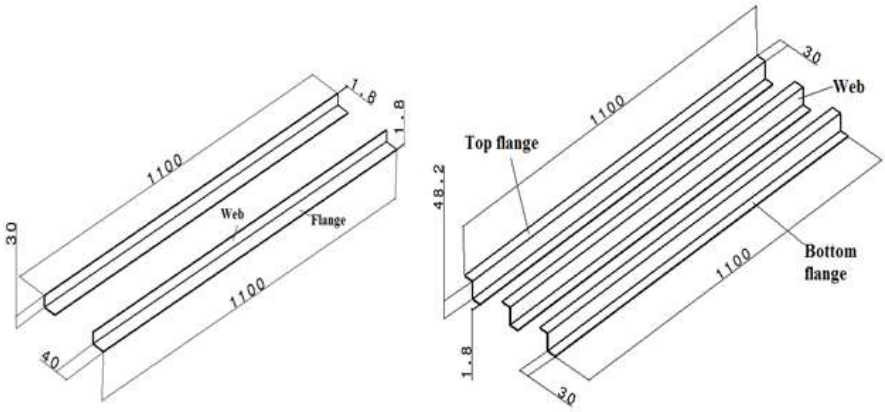

Fig.5 Dimensions of stringers (in mm)

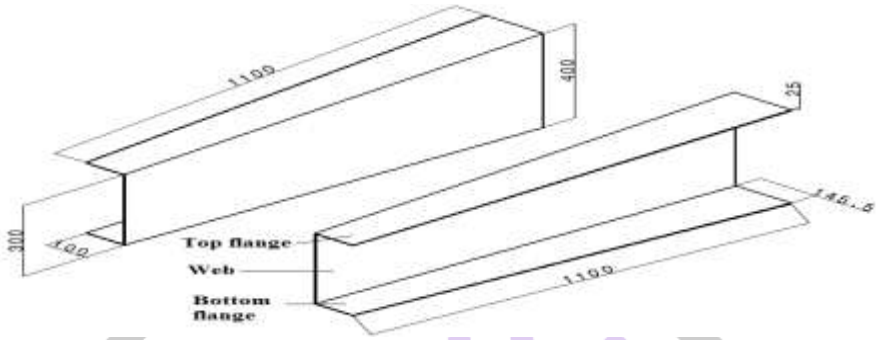

Fig.6 Dimensions of C-spar (in mm)

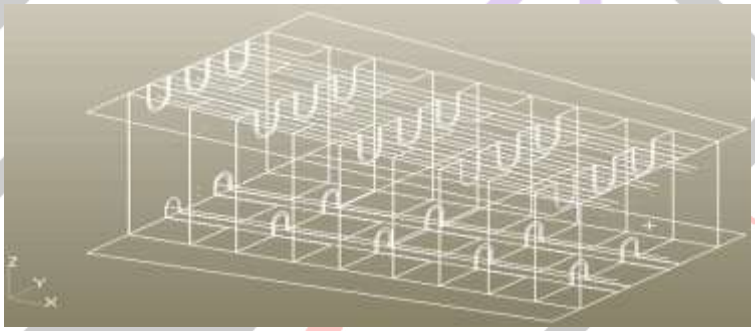

Fig.7 Complete wire frame model of Wing box

B. Material Specification

Selection of aircraft materials depends on many considerations, which can in general be categorized as cost and structural performance. Cost includes initial material cost, manufacturing cost and maintenance cost. The key material properties that are pertinent to maintenance cost and structural performance are Density, stiffness (elastic modulus), strength (ultimate and yield strengths), durability, damage tolerance (facture toughness and crack growth), corrosion. The material considered for the wing box structure is aluminum alloy 2024-T351. The properties of Al 2024-T351 are shown in the Table 1.

Table 1 Properties of Al2024-T351

Elastic Modulus (E)	70 KN/mm^2
Poisson's Ratio (γ_e)	0.3
Yield strength (σ_y)	280 N/mm^2
Ultimate strength (σ_u)	470 N/mm^2
Elongation	19%

C. Loads on the wing box structure

Most of the wings buckling loads are carried by the spars in the wing structure. The maximum bending moment occurs at the root of the spar where wing and fuselage components are attached. The load calculation for the wing box which is shown in the figure 8 is as follows,

- Weight of the aircraft considered = 34335N
- Design load factor = 3 times the gust load

- Total load acting on the aircraft = 34335 x 3 = 103005 N
- Factor of safety considered in design of aircraft = 1.5
- Therefore Total design load on the aircraft = 103005 x 1.5 = 154.5075 x 10^3 N
- Total lift load on the aircraft is distributed as 80% and 20% on wing and fuselage respectively.
- Total load action on the wings = 123606N

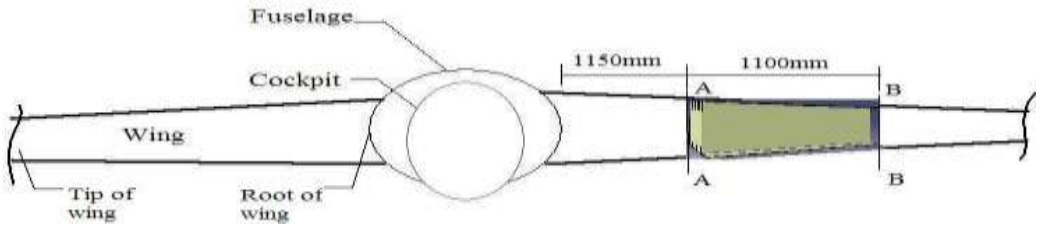

Fig.8 Position of the wing box in the wing structure

- The load acting on each wing = 61803N
- The resultant load is acting at a distance 1150mm form the wing root
- The bending moment about the section A-A = 71.07 x 10^6N-mm
- The load required at the tip of the wing box at section B-B to simulate the same bending moment at the root of the wing at section A-A is the ratio of bending moment at section A-A and length of the wing box = 64.61 x 10^3 N
- Total length of application of load is the sum of lengths of top and bottom skin and 2 webs of spar and 2 L-stringer webs and 3 Z-stringer webs and 3 Z-stringer bottom flanges. = 2294.6mm
- UDL = Load/Total length of application of load = 28.12 N-mm

III. Finite Element Modelling

The purpose the finite element model is to make a model that behaves mathematically as being physically modeled and creates appropriate input files for the different finite element solvers. Meshing is carried out by using CQUAD4 and CTRIA3 shell elements. Fine meshing is carried out at the locations where there is stress concentration. Coarser meshing is carried out at rest of the regions in the structure. To arrest buckling, one dimensional bar elements are used at three locations of each of the rib webs shown in figure 9. The type and number of elements used for the analysis are shown in Table 2.

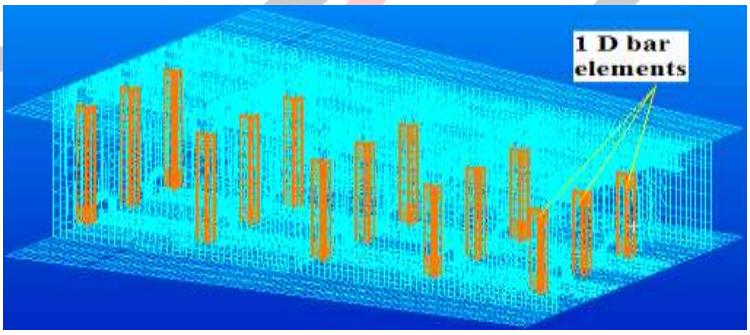

Fig.9 3-D view of Meshed model

Table 2 Element details

TYPE OF FINITE ELEMENT	NUMBER OF ELEMENTS
CQUAD4	26312
CTRIA3	113
BAR	277

A. Loads and Boundary conditions

The loads and boundary conditions along with the finite element model are shown in figure 10. A load of 64.61 KN is converted into uniformly distributed load and is applied at the shorter end of the wing box. This load will essentially create the required bending moment at the fixed end.

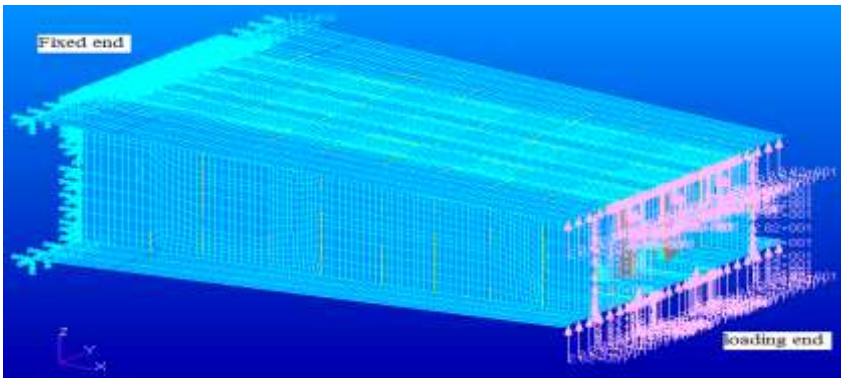

Fig.10 Loads and Boundary conditions

IV. Results and Discussions

A. Linear static stress analysis of the wing box

Linear static stress analysis is carried out for the entire model of the wing box. Stresses at two column elements at a distance 642.6mm which is the region between ribs 2 and 3 are noted. Average stress is calculated by taking the average of all the stresses. The deformed model is shown in figure 11. Since the load applied is at the shorter end of the wing box, the maximum deformation is seen at the shorter end of the wing box. The maximum stress developed in the wing box is at the bottom portion of the fixed end.

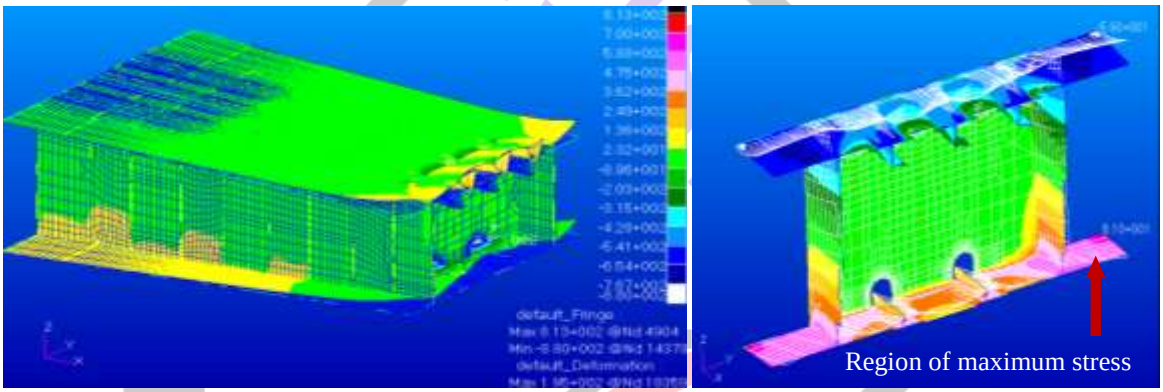

Fig. 11 Deformed shape and Stress analysis result

B. Buckling analysis of the wing box

Buckling is observed due to the applied load. Hence to avoid the failure of the wing structure due to buckling, three one dimensional stiffeners for each web portion of the ribs is added. Twelve panels of the top plate of the wing box are evaluated for failure due to buckling. The investigation shows no buckling after the addition of the stiffeners at the rib webs. Without the ribs the analysis shows the model as completely distorted, when the stiffeners are added the buckling analysis is as shown in figure 12.

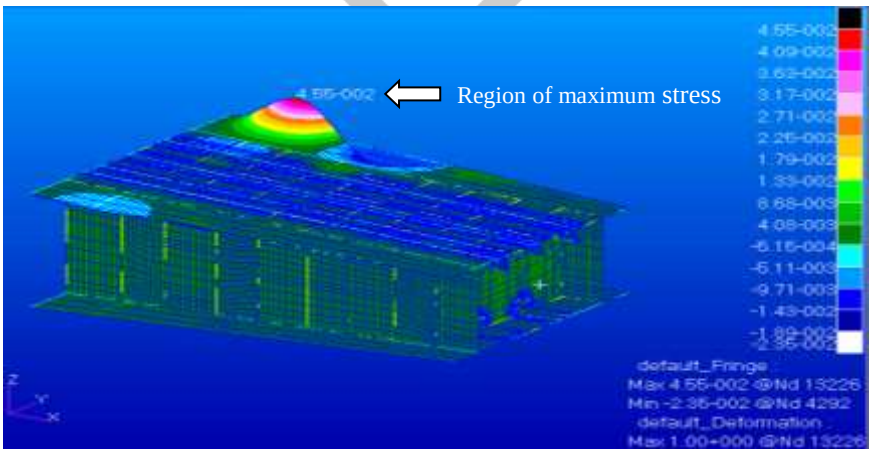

Fig.12 Buckling analysis of wing box showing region of maximum stress

The stress contour, indicate the maximum stress as 0.0455 N/mm^2, which is less than the maximum stress developed in the wing box and much lesser than the yield strength of the material considered. Hence the structure is safe.

C. Theoretical Validation

Theoretical calculation of linear static stress and buckling strength are carried out for the purpose of validation and it is as described below. The results obtained for each of the 12 top plate panels of wing box as both analytical and the FEM are tabulated in the Table 3 which shows the complete comparative results for buckling strength and buckling factor.

- **Linear static stress**

1. Bending moment is calculated by taking the product of total load and the distance between the ribs 2 and 3 at a distance of 459.69 mm from loading end.
2. Bending load is calculated by taking the ratio of calculated bending moment and the depth between the top plate and the bottom plate of the wing box model.
3. Average stress is calculated by taking the ratio of calculated load and the cross sectional area at the top plate at a distance of 459.69 mm from loading end.

- **Buckling strength**

1. Sheet aspect ratio is calculated as:

$$\frac{a}{b} = \frac{\text{Long dimension of plate or unloaded edge}}{\text{Short dimension of plate or loaded edge}}$$

2. Buckling co-efficient (k_c) of the panel is calculated from the graph C5.2 pp.671 [6].
3. Elastic buckling strength is calculated from the equation C5.2 pp.670 [6]:

$$\sigma_{cr} = \frac{\pi^2 \times k_c \times E}{12(1-\gamma_e^2)} \times \left(\frac{t}{b}\right)^2$$

Where, σ_{cr} = Buckling strength in N/mm^2
k_c = Buckling coefficient which depends on edge conditions and sheet aspect ratio (a/b)
E = Modulus of elasticity in N/mm^2
γ_e = Elastic Poisson's ratio
t = Sheet thickness in mm
b = Short dimension of plate

4. Critical load is calculated as the product of crippling stress and cross sectional area of the loaded edge of the panel:

$$P_{cr} = \sigma_{cr} \times Area$$

5. Analytical buckling factor is calculated as the ratio of critical load and applied load:

Buckling factor, $BF = \frac{P_{cr}}{P_{app}}$ Where, P_{cr} = Critical load in Newton P_{app} = Applied load in Newton.

Table 3 Comparative results of Buckling Factor between Analytical method and FEM

Panel	Average stress (N/mm^2)	Area (mm^2)	Load (N)	a/b ratio	Buckling coefficient	Buckling strength (N/mm^2)	Crippling load (N)	Buckling Factor (Analytical)	Buckling Factor (FEM)
1	1.6033e-3	198.722	0.318619	1.43	4.3	294.334	58.4907e3	183.5759e3	184.09e3
2	6.8521e-4	198.722	0.136166	1.43	4.3	294.334	58.4907e3	429.5548e3	430.75e3
3	3.0997e-5	198.722	6.159e-3	1.43	4.3	294.334	58.4907e3	9.4954e6	9.5218e6
4	4.5665e-4	277.625	126.78e3	1.014	4	136.7767	37.9726e3	299.5122e3	298.52e3
5	7.6728e-5	277.625	21.30e-3	1.014	4	136.7767	37.9726e3	1.782e6	1.7767e6
6	9.1113e-5	277.625	25.29e-3	1.014	4	136.7767	37.9726e3	1.50117e6	1.496e6
7	4.518e-6	277.625	1.254e-3	1.014	4	136.7767	37.9726e3	30.2739e6	30.173e6
8	8.6082e-5	277.625	23.89e-3	1.014	4	136.7767	37.9726e3	1.5889e6	1.5836e6
9	4.1771e-5	277.625	11.6e-3	1.014	4	136.7767	37.9726e3	3.27e6	3.6e6
10	1.132e-4	270.125	30.57e-3	1.042	4	144.5	39.027e3	1.27e6	1.27e6
11	1.025e-4	270.125	27.7e-3	1.042	4	144.5	39.027e3	1.4e6	1.4e6
12	4.932e-5	270.125	1.23e-4	1.042	4	144.5	39.027e3	316.5e6	378e6

V. Conclusions

A segment of wing box structure is considered for evaluation of static and buckling load carrying capability. FEM is adopted for carrying out linear stress analysis and buckling analysis. One of the critical load cases from the normal flight condition is considered for the analysis. After the addition of one dimensional bar elements at each of the web portion of the ribs of the aircraft wing structure, the maximum stress developed through FEM is 61 N/mm^2, which is less than the yield stress of the material considered which proves the structure is safe for the load considered.

Linear static buckling analysis is carried out for the segment of wing box and one of the root panels of the top skin showed the maximum buckling deformation and the buckling load factor found is 378e6 which shows crippling load is more than the applied load. Thus the structure is safe.

Compressive stresses developed on the top skin panels are obtained from the linear static analysis result and the critical buckling stresses for each of the panels are calculated theoretically and are verified with the FEM results and a good correlation between analytical calculations and FEM predictions are obtained.

References

[1] Ahmadian, M.T., Movahhedy, M.R., Rezaei, M.M., 2011. Design and Application of a New Tapered Super element for Analysis of Revolving Geometries, Finite Element in Analysis and Design, Vol. 47 Issue 11, pp. 1242-1252.
[2] Taylor R. The role of optimization in component structural design: application to the F-35 joint strike fighter, 25th International Congress of the Aeronautical Sciences; 2006.
[3] Kuntjoro, W., Wing Structure Static Analysis using Super element, International Symposium on Robotics and Intelligent Sensors 2012 (IRIS 2012), Procedia Engineering 41 (2012) pp.1600 – 1606.
[4] Sridhar Chintapalli, The development of a preliminary structural design optimization method of an aircraft wing-box skin-stringer panels Aerospace Science and Technology 14 (2010) pp.188–198.
[5] Patrick E. Fenner, Finite element buckling analysis of stiffened plates with filleted junctions, Thin-Walled Structures 59 (2012) pp.171–180.
[6] E.F Bruhn, "Analysis & design of Flight vehicles structures", 1973 edition, pp.670–672.
[7] Dawn C Jegley, "Improving strength of post buckled panels through stitching", composite structures 80 (2007) pp.298-306.
[8] G. Schuhmacher, "Multidisciplinary design optimization of a regional aircraft wing box", American institute of Aeronautics and Astronautics, 2002.
[9] Ghania Ikhenazen, "Finite element analysis of linear plates buckling under in-plane patch loading", journal of constructional steel research 66 (2010) pp.1112-1117.
[10] Richard DEGENHARDT, "Buckling and post buckling analysis of a CRPF stiffened panel for a better material exploitation" DLR, institute of Structural Mechanics, Braunschweig, Germany 2003.
[11] Adrien Perret, "Global behavior of a composite stiffened panel in buckling, Part-2: Experimental investigation", Composite structures 94 (2012) pp.376-385.
[12] Linghai Jiang, "Buckling analysis of stiffened circular cylindrical panels using differential quadrature element method", Thin-walled structures 46 (2008) 390-398.