Voltage Profile Improvement of Transmission Line Using SSSC

[1]Dr K S Apremeya, [2]Veena

[1]Associate Professor, [2]PG Scholar
Department Of Studies in EEE
UBDT College Of Engineering Davangere, Karnataka, India

***Abstract*— Electric power system is a large complex system. In this vast system constant variations are continuously occurs. Load demand increasing day by day. Utilities fails to supply energy to the total demand with reliable. To increase the reliability of the system build a new system with planning or expand the existing system it's not economic. So FACTs devices are used to increase the reliability and security of the system. By controlling the power system network parameters such as sending end voltage, receiving end voltage, line current, active voltage, reactive voltage we can achieve reliability. Using static synchronous series compensator controls power flow in fully loaded condition and any disturbance condition by injecting the reactive power. The complete system simulated in MATLAB. Simulation of 14 bus system with and without SSSC shows the voltage, current, active and reactive power compensation and makes the system stable.**

I. INTRODUCTION

Electric power system consists of generation, transmission, distribution. Modern society the life style of the people increases the demand. Due to increase in demand increases the reactive power consumption above factors makes system complex. Electric power flow in the transmission system depends on parameters of the system such as sending end voltage, receiving end voltage, phase angle between them and impedance of line [1]. Power flow capacity of transmission line can be reduced by inclusion of inductive reactance in series with line. Similarly to increase the power transfer capability of transmission line by inclusion of capacitive reactance in series with line. Thyristor's are switches to regulate the power transfer in the line. This can be overcome by FACTS controllers. FACTS are static equipment based on power electronic using these parameters of power system can be controlled. Facts Controls force the system to keep within the limit. Based on power electronic devices used in controller it can be divided
In two following types [2]

1 variable impedance type

2 voltage source converter types are used.

Flexible AC transmission system maintains the system secure and it provides the facility to carry the power under over loading of the transmission lines. In this
Project static synchronous series compensator is used. SSSC is static switch which inject the variable voltage to the line which is quadrature with line current and also independent of the line current. Power generation and transmission called as composite system, balancing system is more complex so by using the SSSC complexity of the system can be reduced by exchanging the real and reactive power with transmission system. If it adds negative resistance means it gives the real power to the system. Reactive power may be capacitive or inductive type depending upon the reactive power absorption or absorption.

II. FACTS AND FACTS CONTROLLERS

A. Flexible AC Transmission System (FACTS):

Alternating current transmission systems incorporating power electronics based and other static controllers to enhance controllability and increase power transfer capability.

B. FACTS Controller:

Power electronics based system and other static equipment that provides control of one or more AC transmission system parameters [2].

FACTS have been widely used to maintain reactive power supply. These devices played important roles in power flow control, voltage regulation and adjustment, reactive power compensation, transient and voltage stability improvement, transmission capability enhancement, power conditioning, power quality improvement, and interconnection of renewable distributed generation and battery storage systems.

FACTS Devices are increase the controllability of the system and improves the power quality. These should have capability to inject reactive current for the grid voltage support when there is voltage sag and it has inject active current immediately after the fault is cleared [3].

III STATIC SYNCHRONOUS COMPENSATOR

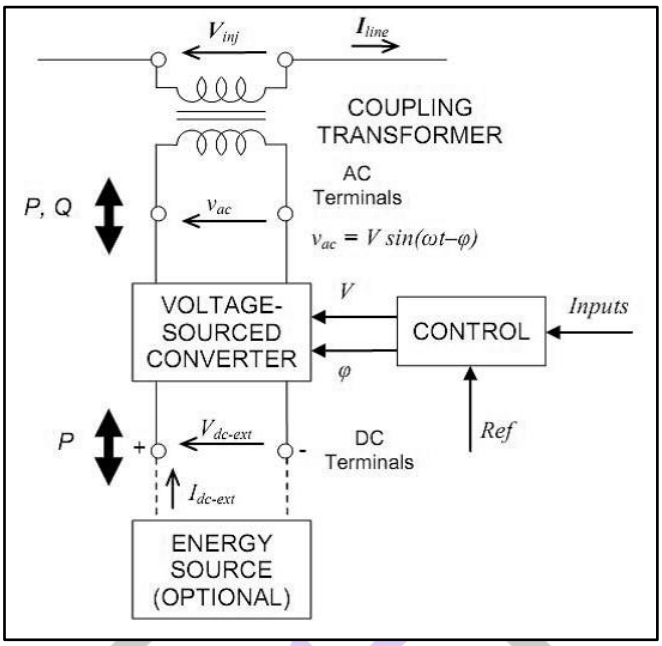

Fig. 1. Configuration of SSSC

Figure represents the functional block diagram of the SSSC. It is supported with the transmission line. It injects the variable voltage of magnitude and phase angle at base frequency or operating frequency. Static synchronous series compensator was introduced by guygui in 1989. Its objective is to improve voltage profile flat and increase the power transfer capability. It supplies both inductive and capacitive reactive power based on the absorption and supply. Output of the compensation is variable voltage that is self-subsistence of the line current.

A generalized expression for the injected voltage, V_{sssc}, is given by

$$v_{sssc} = \pm j v_{sssc}(c)\frac{I}{i} \qquad (3.1)$$

Where

$\pm j v_{sssc}(c)$= injection of capacitive or inductive reactive compensation voltage and which is controlled magnitude and phase angle.

I = line current

Flow of power in the line is given by [4]

$$P_q = \frac{v^2}{x_{eff}}\sin\delta = \frac{v^2}{x_l(1-k)}\sin\delta \qquad (3.2)$$

$$Q_q = \frac{v^2}{x_{eff}}(1-\cos\delta) = \frac{v^2}{x_l(1-k)}(1-\cos\delta) \qquad (3.3)$$

Where k is the degree of compensation

This is given by

$K=\frac{x_q}{x_L}$

Where x_q is the reactive power supplied by SSSC

x_L=line reactance of transmission line

When X_q is negative when compensation inductive mode and positive when it is in capacitive mode.

δ= transmission angle, which is given b

$$\delta = \tan^{-1}\frac{X_L}{R} \qquad (3.4)$$

Normal transmittable active power decreases, rapidly with decreasing the $\frac{X_L}{R}$ ratio. The SSSC with an appropriate dc supply would be able to inject in addition to the reactive power compensating voltage

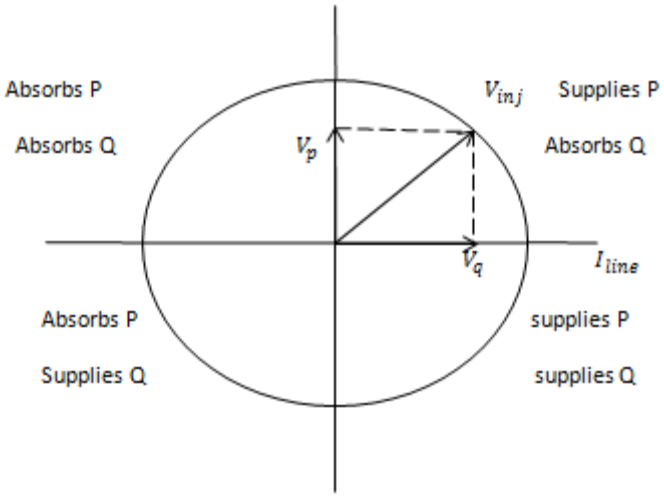

Fig. 2. Four quadrant operation

Reactive power exchange with the power system is voltage and phase displacement. Operation of SSSC in the four quadrants as shown in figure Power in the transmission line reduced due to heavy loading under that situation power flow from compensating device that is SSSC by raising the amplitude of voltage source converter. Similarly under light load condition sending end voltage is less than the receiving end voltage nothing but Ferranti effect to avoid this excess current present in the transmission line flows from line to SSSC that is called absorption of power. Magnitude and phase angle of the voltage source converter are variable to regulate the power flow in the lines. Very important designation to permit the active and reactive power exchange with the power system are voltage and phase displacement [5]. Assume a DC capacitor is connected across the voltage source converter. Line current is the reference phase; maximum voltage injected by SSSC is V_{maxpq} this voltage rotates about an axis of circle. In practical system limitation in the power system. The four quadrant operation in the SSSC supplied voltage has restrained within bounds. Capacitive or inductive reactance based on this power flow can be reduced or increased [6].

$$V_{pq} = -JKX_c I_{line} \qquad (3.5)$$

Where k is a variable

And kX_c is the variable capacitance

Total reactance of the transmission line is reduced due to action of the line current and voltage injected by SSSC.

At 180 degree voltage injected is reversed

$$-V_{pq} = JKX_c I_{line} \qquad (3.6)$$

Here due to increase in the transmission line reactance, line current and power transmitted are different. The above formula V_{pq} Shows that change in the phasor magnitude lead to astray to some extent, so magnitude of both line current and voltage are equal but voltage which is supplied by SSSC is regulated.

IV TEST SYSTEM DISCRIPTION

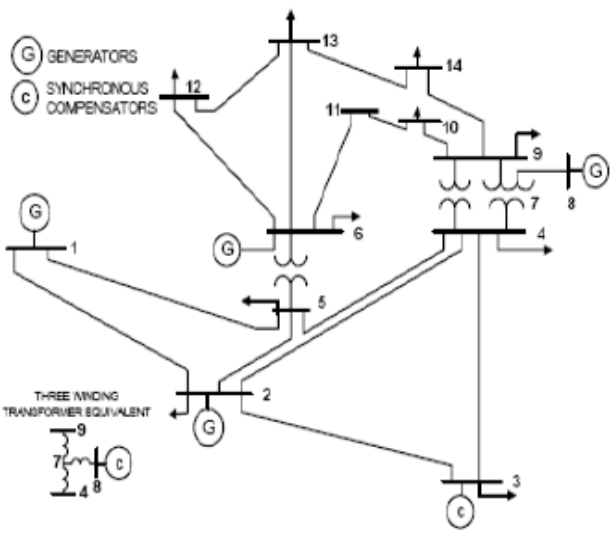

Fig. 3. Test Model

METHODOLOGY

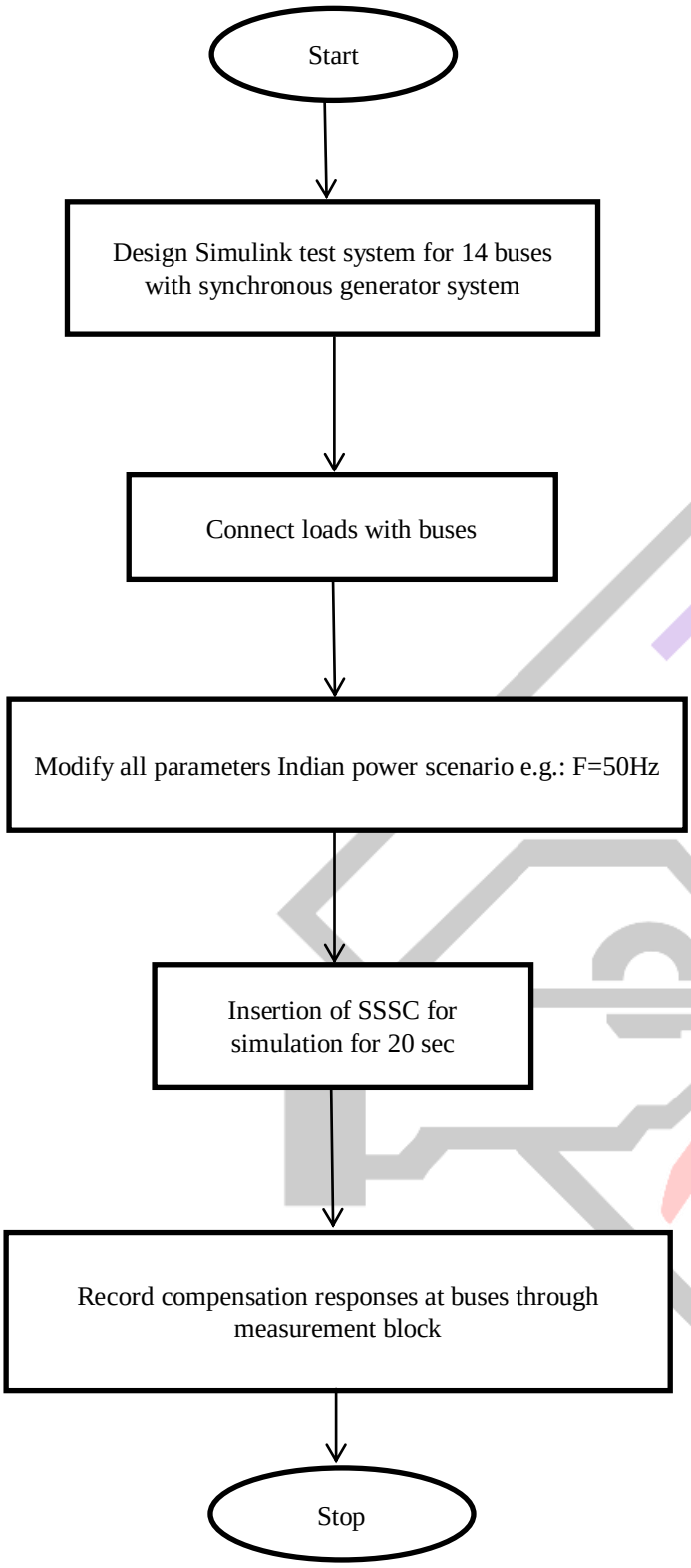

Fig. 4. Flow chart of methodology

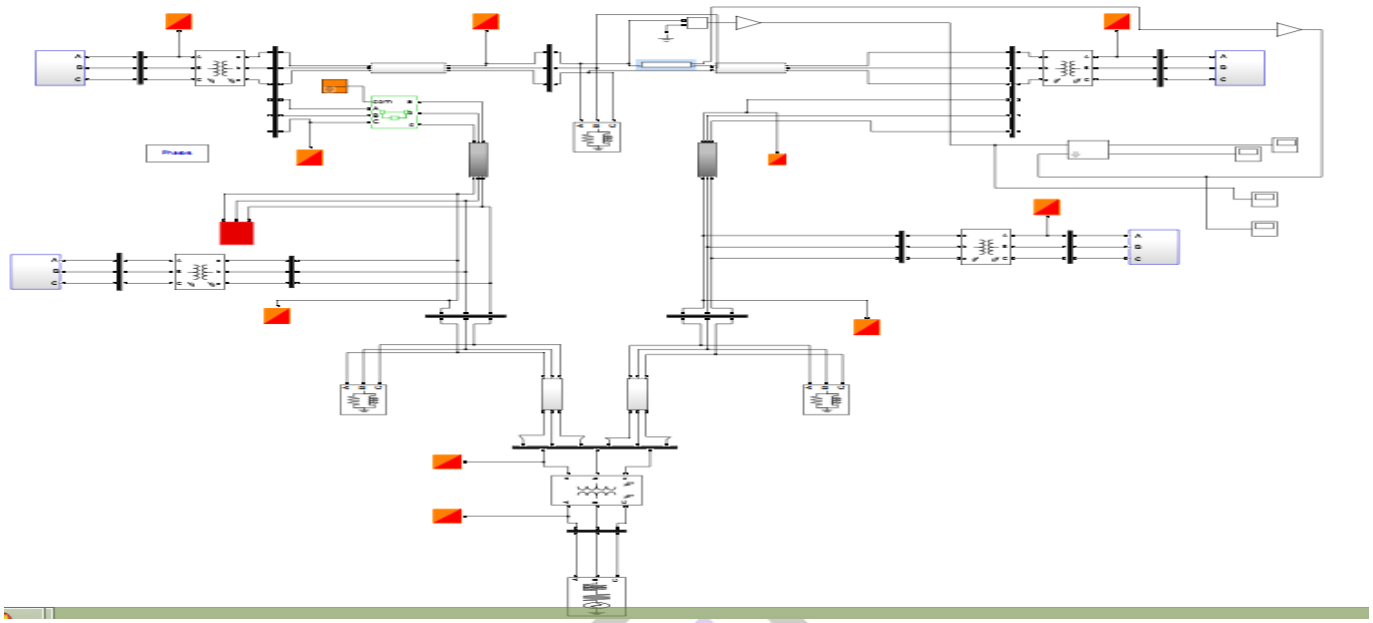

Fig. 5. Simulink model of SSSC

V. SIMULINK RESULTS

Output waveforms without and with SSSC. Output of Simulink results here X axis represents time in seconds it common to all voltage, current, active power, reactive power.

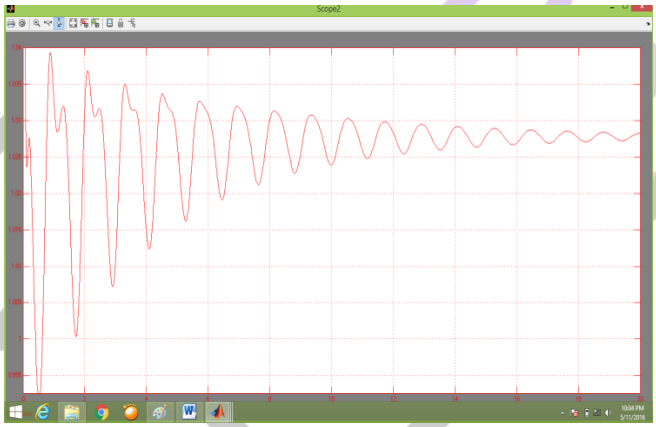

Fig. 6. Voltage at bus 2 without SSSC

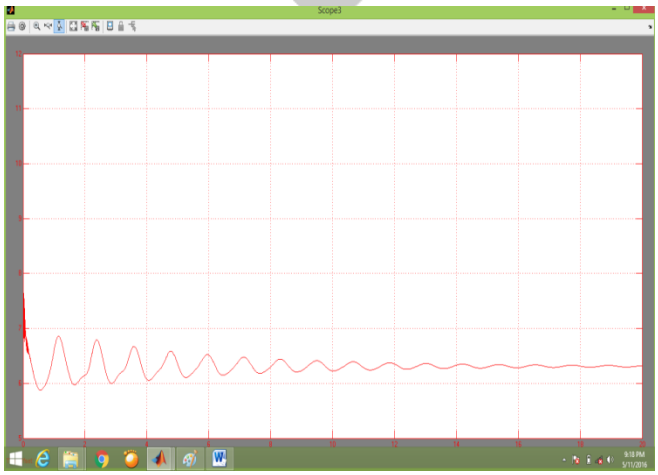

Fig. 7 . Current at bus 2 without SSSC

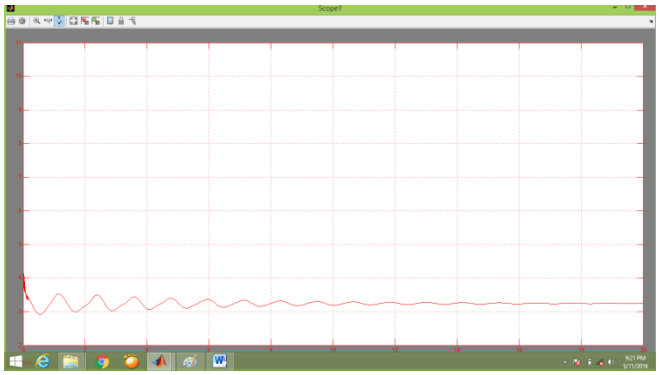

Fig. 8. Real power at bus 2 without SSSC

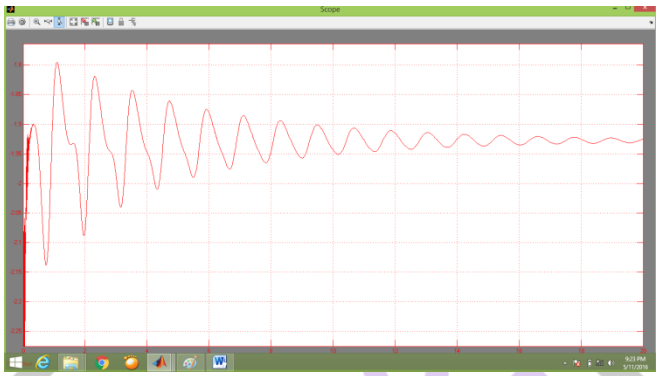

Fig. 9. Reactive power at bus 2 without SSSC

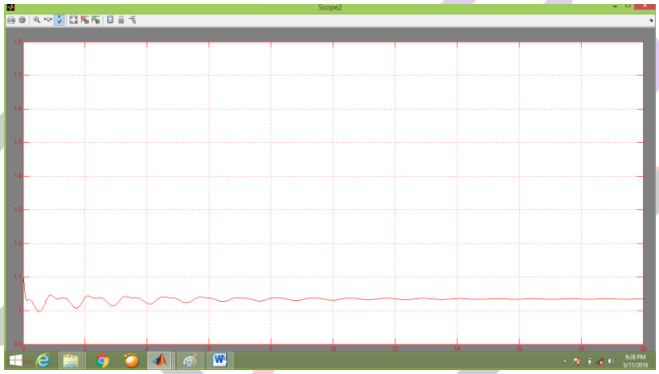

Fig. 10. voltage at bus 2 with SSSC

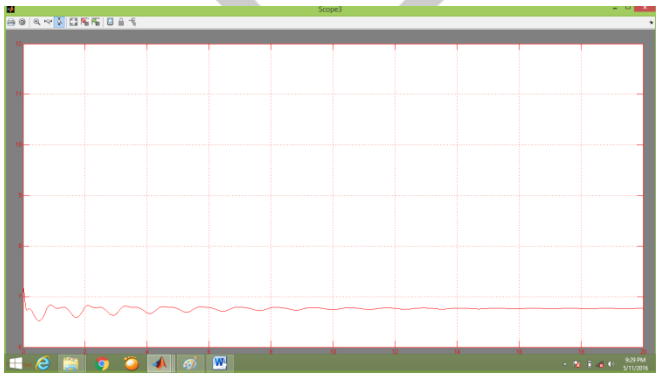

Fig. 11. current at bus 2 with SSSC

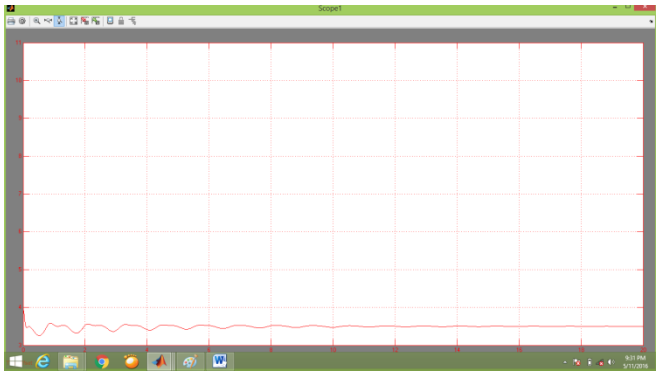

Fig. 12. Real power at bus with SSSC

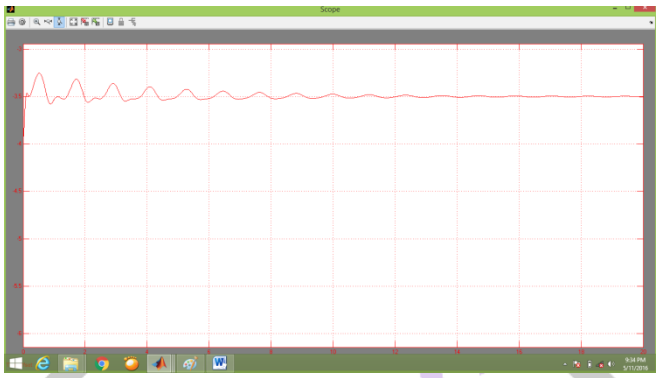

Fig .13. Reactive power at bus 2 with SSSC

CONCLUSION

SSSC has become the most important device for the reactive power compensation. SSSC Simulink model has been designed for the test system and analyzed the simulation results voltage, current, power, reactive power. PI controller is used with SSSC to enhance its performance. By observing the results with and without SSSC we concluded that SSSC can effectively improves the voltage

REFERENCES

[1] kalyan K. Sen, "SSSC- static synchronous series compensator: theory, modeling, and Application".
[2] K. R Padiyar, "FACTS controllers in power transmission and distribution".
[3] Manindar rohal, "Application of SSSC based power oscillation damping controller for transient stability enhancement of multimachine system for unsymmetrical faults".
[4] Shashi gandhar, "Application of SSSC for compensation assessment of interconnected power transmission" .
[5] S Mythili, "voltage stability improvement and power oscillation damping using static synchronous series compensator (SSSC)".
[6] H taheri, "Application of Synchronous Static Series Compensator (SSSC) on Enhancement of Voltage".
[7] K Tsuji, "Fault current limiting and power system stabilization by static synchronous series compensator".