Enhancement of Power System Transient Stability using Superconducting Magnetic Energy Storage

[1]Abhishek B. Singal, [2]Dr. Alpesh S. Adeshara, [3]Dr. Chirag K. Vibhakar

[1]PG student, [2]Associate Professor, [3]Professor & HOD
(Electrical Engineering Department)
V.V.P. Engineering College, Rajkot, Gujarat India

***Abstract*—This paper presents a study on SMES for power system transient stability enhancement. The transient stability of a power system is improved by PI controlled superconducting magnetic energy storage (SMES). The comparison of SMES and PI controlled SMES has been carried out. The simulation results show that under 3 phase fault, the performance of PI controlled SMES is better than SMES without PI controller. The proposed method provides a very simple and effective means of improvement of transient stability.**

***IndexTerms*—SMES, PI controller, Transient Stability**

I. INTRODUCTION

Power systems have been experiencing severe changes in electric power generation, transmission, distribution, and end-user facilities. Continuing electric load growth and higher power transfer in a largely interconnected network lead to complex and less secure power system operation. In addition, certain factors such as technical, economical, environmental, and governmental regulation constraints put a limitation on power system planning and operation. Power system engineers facing these challenges seek solutions to operate the system in more a flexible and controllable manner. Recent development and advances on both superconducting and power electronics technology have made the application of SMES (superconducting magnetic energy storage) systems a viable choice to bring solutions to some of the problems experienced in power systems. Although SMES was initially envisioned as a large-scale load-leveling device, it is now seen as mainly a tool to enhance system stability, power transfer, and power quality in power systems in the process of deregulation. The power industry demand for more flexible, reliable and fast real power compensation devices provides the ideal opportunity for SMES applications.

The superconducting magnetic energy storage (SMES) unit is designed to store electric power in the low loss superconducting magnetic coil. Power can be absorbed by or released from the coil according to system requirement.In this paper, a systematic approach is used to design a SMES unit with proportional-integra1 (PI) controller for enhancing the power system transient stability. The PI controller is very simple in structure and had been successfully used for the transient stability improvement purpose.

II. BASIC CONFIGURATION OF SMES

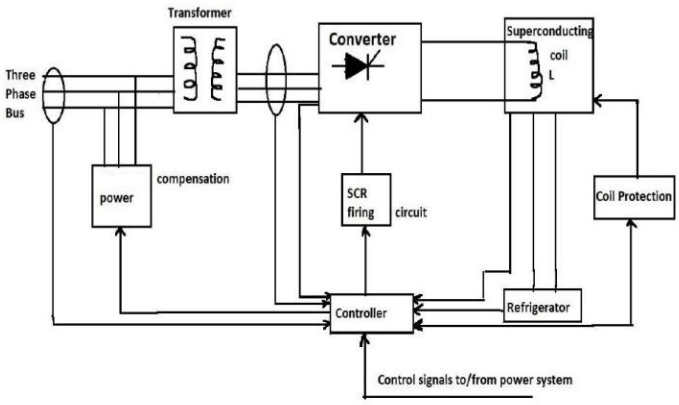

Fig. 1: Basic configuration of SMES

Complete SMES unit consists of a three phase bus connected to a transformer. GTO or other types of converter are attached to the transformer. There are normally 12 pulse convertors connected to the SMES unit. SMES coil 'L' is basically inductor which is in superconducting state. A low temperature is maintained to keep coil in superconductingstate through a refrigerator. Normally we use HTS type super conductors where liquid nitrogen is sufficient to lower the temperature below critical temperature. A coil protection is also used that saves the coil in case of large current or magnetic stress. Controller is used to set firing angle of converters which will tell SMES when to charge and when to discharge.

III. MODELING OF SMES

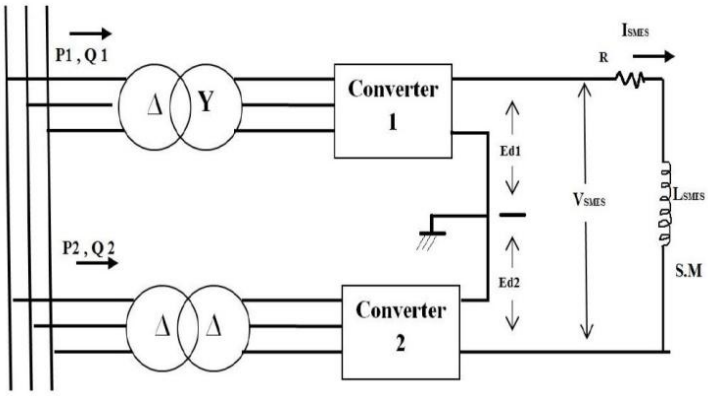

Fig. 2: Circuit diagram of SMES unit

SMES unit consists of two sets of transformer that are connected to A.C three phase line. Other end of the transformer is connected to two a 12-pulse convertor, two sets of 6 –pulse bridge force commutated converter, which is in series with the superconducting inductor L_{SMES}.We are only considering the active power (P) control using the SMES so reactive Q is not considered. That's why we used force commutators where firing angle of thyristor is fix. When no power is transferred, maximum charging mode happens at 0o and for maximum discharging mode 180˚.

Since the I_{SMES} current going through bridge is not reversible, active power P_{SMES} simply has positive and negative value depending upon the situation it can deliver or withdraw power hence keeping the system stable.

Active power of SMES P_{SMES}, current I_{SMES} and voltage V_{SMES} of SMES is related as

$$P_{SMES} = V_{SMES} \cdot I_{SMES} \quad (1)$$

If V_{SMES} is positive value that means that energy is transferred to SMES from power system and if V_{SMES} is negative that means energy is taken out from SMES and transferred to the power system. We know current across a coil is given as

$$\frac{dI_{SMES}}{d\tau} = \frac{(V_{SMES} - R_{SMES}\, I_{SMES})}{L_{SMES}} \quad (2)$$

Since we are taking a superconductive coil , we know its resistance is zero , so putting R_{SMES}=0 in Equation (2) and Integrating equation (2) from initial time 'to' to 't' with initial current of superconducting coil as I_{SMO}, we get current I_{SMES} in terms of Voltage V_{SMES} of superconductor and initial current I_{SMO} is given by

$$I_{SMES} = \frac{1}{L_{SMES}} \int_{t_0}^{t} V_{SMES}\, d\tau + I_{SMO} \quad (3)$$

Energy that is being stored inside the superconducting coil can be written as

$$W_{SMES} = W_{SCO} + \int_{t_0}^{t} P_{SMES}(\tau) d\tau \quad (4)$$

Where W_{SCO} is the energy stored inside the coil at t=to and is given as

$$W_{SCO} = \frac{1}{2} L_d I_{SMO}^2 \quad (5)$$

Change in the rotor angular speed is caused due to any external disturbance that is related to the SMES voltage V_{SMES} as given below.

$$\Delta V_{SMES} = \frac{K_C}{1+sT_C} \cdot \Delta\omega \quad (6)$$

Where K_C is the gain of control loop of SMES and T_C is the time constant of the control loop. Equation (3) and (6) are used to design the SMES model in MATLAB for simulation.

Using the above analysis and equations we can easily design a SMES model that can be used in the MATLAB with the synchronous generator connected to infinite bus. From Equations (3) and (6) we can make a model that will give us the power of the SMES, P_{SMES} which will vary in accordance to the change or deviation of the angular rotor speed of the synchronous generator.

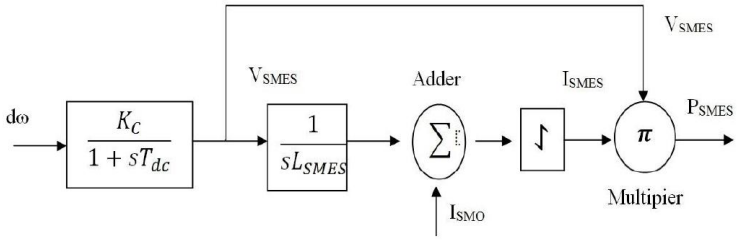

Fig. 3: Block diagram of SMES model

The deviation in the angular speed of the rotor of the synchronous generator is feed to the transfer function containing loop gain and time constant of feedback loop of the SMES coil.From Equation (6) we know that this change in ω will give the changed V_{SMES} i.e. voltage across the coil. Using the equation (3) we get current I_{SMES} across the coil from the voltage V_{SMES} by integrating and adding the initial current I_{SMO}.

For the system to not get damaged we use a saturator to limit the current across the coil. Now current across the coil of superconductor I_{SMES} and voltage across the coil of superconductor V_{SMES} is sent to a multiplier and we know from equation (1) it will give power P_{SMES} across the coil.

IV. PI CONTROLLER

Basic PI controller block is given by,

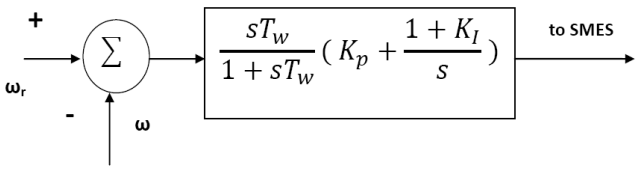

Fig. 4: Block diagram of PI controller

The PI controller is fed with the reference angular speed taken 1 pu generally ω_r and rotor angular speed ω. This PI controller output is attached to the SMES unit. T_W is known in system parameters, values of K_I and $K_P$are given below.

Kp = 44
Ki = 900

V. POWER SYSTEM MODEL

In this paper for the analysis of transient stability,the power system model connected with a PI controlled SMES under the three-phase fault at infinite bus as shown in the power system model shown in Fig. 5 has been simulated in MATLAB Simulink environment. The 3LG fault occurs at 15.1 to 15.2 s. The model system consists of a synchronous generator (SG) feeding an infinite bus through a transformer and transmission line. To effectively control the power balance of the synchronous generator during a dynamic period, the SMES unit is placed in the generator terminal bus.

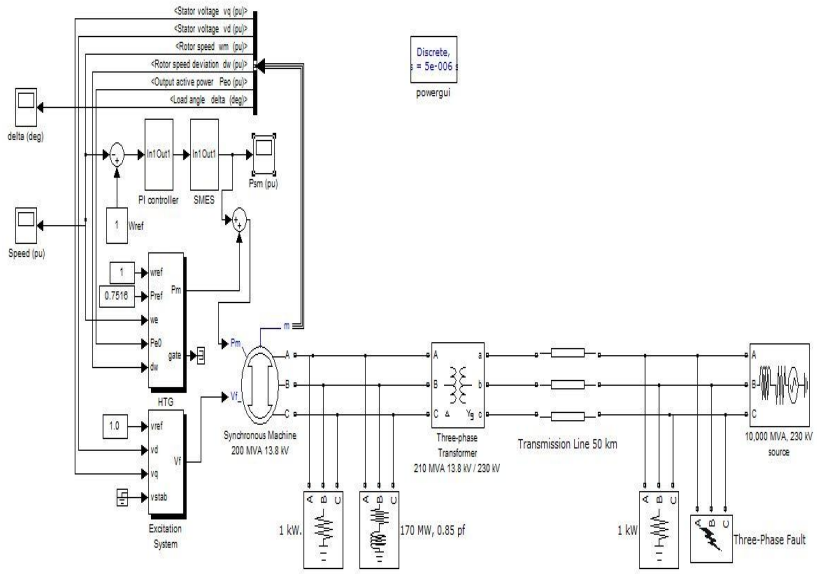

Fig. 5: MATLAB model of power system with PI controlled SMES

VI. SIMULATION RESULTS

Simulations are performed for two different fault conditions,
Case-1: 3LG fault at infinite bus
Case-2: 3LG fault at generator bus
These simulations are carried out in MATLAB Simulink environment for above mentioned cases.

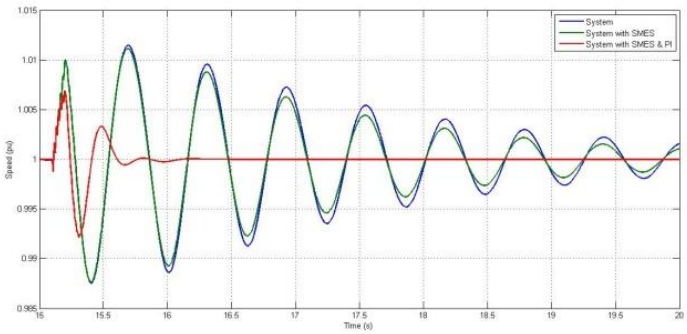

Fig. 6: Graph of Rotor Speed and Time for Case-1

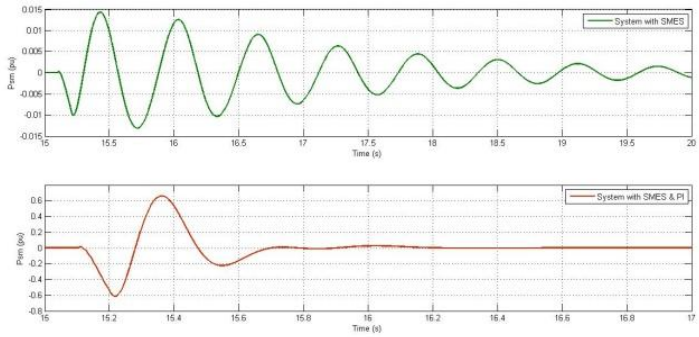

Fig. 7: Graph of SMES Power and Time for Case-1

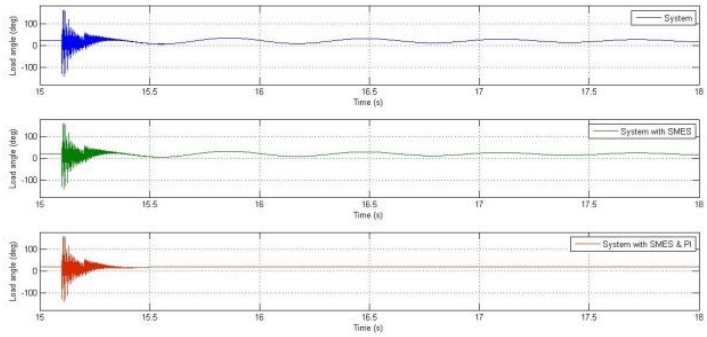

Fig. 8: Graph of Load Angle and Time for Case-1

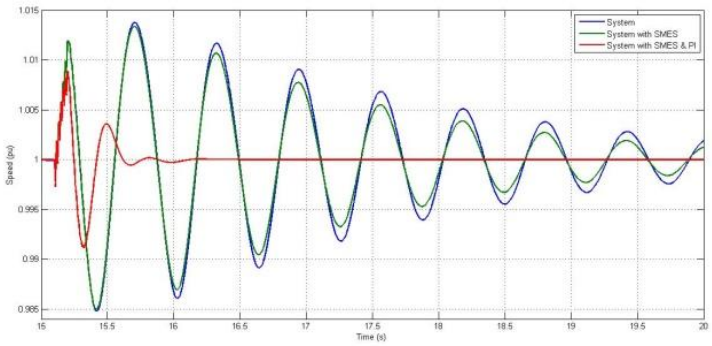

Fig. 9: Graph of Rotor Speed and Time for Case-2

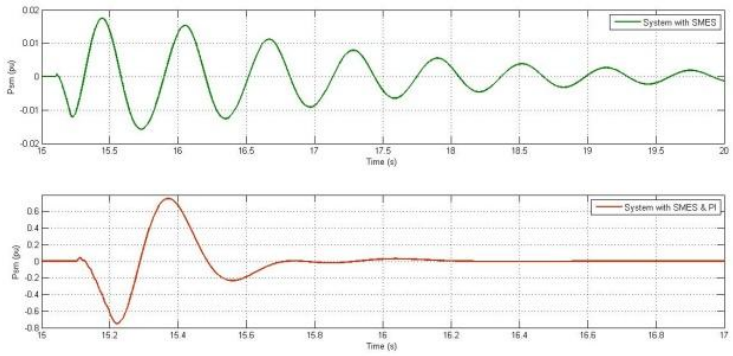

Fig. 10: Graph of SMES Power and Time for Case-2

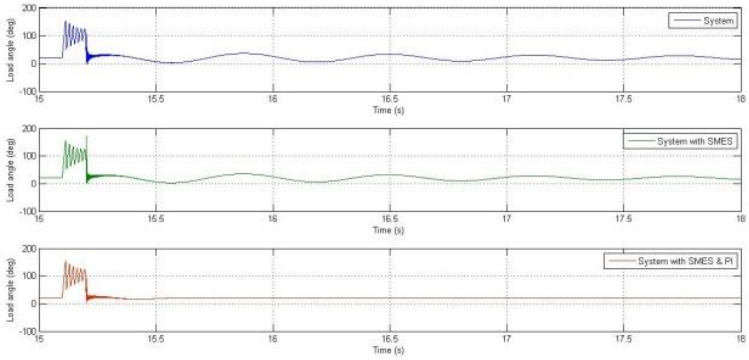

Fig. 11: Graph of Load Angle and Time for Case-2

CONCLUSION

In this paper, the superconducting magnetic energy storage(SMES) unit with a proportional-integral (PI) controller is proposed to enhance the transient stability of the power system.Simulation results clearly show the validity and effectiveness of the proposed method in enhancing the transient stability.

REFERENCES

[1] Mohd. Hasan Ali, Bin Wu and Roger A. Dougal et al, "An Overview of SMES Applications in Power and Energy Systems", Sustainable Energy, IEEE Transaction on (Volume:1, Issue:1), 18 March 2010, 38-47.

[2] Y. Mitani, K. Tsuji and Y. Murakami et al, "Application of Superconducting Magnet Energy Storage to Improve Power System Dynamic Performance.", IEEE Transactions on Power Systems, Vol. 3, No. 4, November 1988, 1418–1425

[3] Chi-Jui Wu &Yuang-Shung Lee et al, "Application of Superconducting Magnetic Energy Storage Unit to Improve the Damping of Synchronous Generator", IEEE Transactions on Energy Conversion, Vol. 6, No.4, December 1991, 573-578

[4] A.H.M.A.Rahim& A. M. Mohammad et al, "Improvement of Synchronous Generator Damping through Superconducting Magnetic Energy Storage Systems.", IEEE Transactions on Energy Conversion, Vol. 9, No. 4, December 1994, 736-742

[5] Chi-Jui Wu &Yuang-Shung Lee et al, "Application of Simultaneous Active and Reactive Power Modulation of Superconducting Magnetic Energy Storage Unit to Damp Turbine-Generator Subsynchronous Oscillations.", IEEE Transactions on Energy Conversion, Vol. 8, No. 1, March 1993, 63-70

[6] R.W. Boom and H.A. Peterson, "Superconductive Energy storage for Power Systems" IEEE Transactions on Magnetics, vol. MAG-8, p.701-703, September 1972.

[7] R.F. Giese, Progress Toward High Temperature Superconducting Magnetic Energy Storage (SMES) – A Second Look, Argonne National Laboratory, December 1998

[8] W.V. Hassenzahl, "Superconducting Magnetic Energy Storage," Proceedings of the IEEE, vol.71, no.9, p.1089-1098, September 1983.

[9] W.V. Hassenzahl, "Superconducting Magnetic Energy Storage," IEEE Transactions on Magnetics, vol.25, no.2, p.750-758, March 1989.

[10] V. Karasik, K. Dixon, C. Weber, B. Batchelder, P. Ribeiro, "SMES for Power Utility Applications: A Review of Technical and Cost Considerations," IEEE Transactions on Applied Superconductivity, vol.9, no.2 p.541-546, June 1999.