Assessment of Voltage Quality in Power Systems

[1]Ashutosh Ranjan, [2]Vinayaka kumar, [3]Rishab Kumar

U.G Students
Siddaganga Institute of Technology, Karnataka, India

***Abstract*: Our technology has become deeply dependent upon the continuous availability of electrical power and commercial power which is available via nationwide grids, interconnecting numerous generating stations to the loads. Sophisticated technology has reached deep into our homes and careers, and with the advent of e-commerce, it is continuously changing the way we interact with the rest of the world .Intelligent technology demands power that is free of interruption or disturbance. A recent study in the USA has shown that industrial and digital business firms are losing $45.7 billion per year due to power interruption.**

Many power problems Originate in the commercial power grid, which, with its thousands of miles of transmission lines, is subject to weather conditions such as hurricanes, lightning storms ,snow ,ice, and flooding along with equipment Failure, traffic accidents and major switching operations.

***Keywords*: Full wave Bridge Rectifier, Interruption, Voltage sag, swell.**

Introduction:- The aim of the electric power system can be summarized as "to transport electrical energy from the generator units to the terminals of electrical equipment" and "to maintain the voltage at the equipment terminals within certain limits."Power problems affecting today's technological equipment are often generated locally within a facility from any number of situations, such as local construction, heavy start up loads, faculty distribution components. Abnormal AC supplies cause frequent energization and de-energization of relays leading to short life span of appliances and of voltages stabilizers themselves.The advent of electronics concepts ,the newer generation load equipments (with microprocessors-based controls and power electronics devices) are more sensitive to power quality variations than was equipment used in the past.

As we know that power in AC circuits is given by:

$P \infty V$, $P \infty I$, $P \infty \cos_{\varphi}$

Since we cannot determine and control the requirements of current and power factor of the connected load in a circuit instantaneously, voltage is the only parameter that can be controlled within a prescribed range to ensure quality power. Power quality disturbances (outages, momentary interruptions, voltage sags, and transients) are much more of a challenge. This motivated us to study, detect, differentiate and create a protection device for various power quality issues through voltage sampling.

Modularity of Analysis and Visualization

Power quality disturbances (outages, momentary interruptions, voltage sags, and transients)are generic term applied to a wide variety of electromagnetic phenomena on the power system. The duration of these phenomena ranges from a few nanosesonds (e.g. lightning strokes) to a Few minutes (e.g feeder voltage regulations) to steady state (harmonic distortions and voltage Fluctuations).

The categories are as follows:

1. Transients

The term transient refers to the refers to the analysis of power system variations to denote an event that is undesirable and momentary in nature

Impulsive transients:

It is a sudden ,non-power frequency change in the steady state condition of voltage, current, or both in the steady state condition of voltage, current ,or both ,that is unidirectional in polarity(primarily either positive or negative) and are normally characterized by their rise and decay times which can also be revealed by their spectral content. The most common cause of impulsive transient is lightning.

Oscillatory transients:

It is a sudden ,non power frequency change in the steady state condition of voltage, current, or both ,that includes positive and negative polarity values. It consists of a voltage or current whose instantaneous value changes polarity rapidly and is described by its spectral content (predominate frequency), duration and magnitude.

Short-Duration Voltage Variations:

These are caused by fault conditions, the energization of large loads that require high starting currents ,or intermittent loose connection in power wiring. Depending on the fault location and the system conditions, the fault can cause either temporary voltage drops (sags),or voltage rise (swells),or a complete loss of voltage (interruptions).

Interruption:

It occurs when the supply voltage or load current decreases to less than 0.1 pu for a period of time not exceeding 1 min. Interruptions can be the result of power system faults ,equipment failures, and control manfunctions . The interruptions are measured by their duration since the voltage magnitude is always less than 10% of nominal.

Sustained Interruption:

When the supply voltage has been zero for a period of time in excess of 1 min, the long duration voltage variation is considered a sustained interruption. Voltage interruption longer than 1 min are often permanent and require human intervention to repair the system for restoration.

Voltage Sag:

Sag is a decrease to between 0.1 and 0.9 pu in rms voltage or current at the power frequency for durations from 0.5 cycles to 1 min and can be said as voltage dip. Typical fault clearing times range from 3 to 30 cycles, depending on the fault current magnitude and the type of overcurrent protection.

Voltage swell:

A swell is defined as an increase to between 1.1 and 1.8 pu in rms voltage or current at the power frequency for durations from 0.5 cycle to 1 min and is also termed as momentary overvoltage and as with sags, swells are usually associated with system fault conditions. One way that a swell can occur is from the temporary voltage rise on the unfaulted phases during a single line-to-ground (SLG) fault.

Long-duration voltage variations:

It encompasses rms deviations at power frequencies for longer than 1 min. Long duration variations can be either overvoltage or under voltages. Over voltages and under voltages generally are not the result of system faults, but are caused by load variation on the system and system switching operations. Such variations are typically displayed as plots of rms voltage versus time.

Overvoltage:

An overvoltage is an increase in the rms ac voltage greater than 110% at the power frequency for duration longer than 1%.They are usually the result of load switching(e.g. switching off a large load or energizing a capicitor bank).The overvoltages result because the system is either too weak for the desired voltage regulation or voltage controls are inadequate. Incorrect tap settings on transformers can also result in system over voltages.

Under voltage:

An under voltage is a decrease in the rms ac voltage to less than 90% at the power frequency for duration longer than 1 min. They are the result of the events that are reverse of the events that cause . A load switching on or a capacitor bank switching off can cause an under voltage until voltage regulation equipment on the system can bring the voltage back to tolerances.

Voltage imbalance:

Voltage imbalance(also called voltage unbalance) is sometimes defined as the maximum deviation from the average of the 3-phase voltages or currents, divided by the average of the 3-phase voltages or currents(expressed in percentage).The ratio of be either the negative or zero sequence components to the positive sequence component can be used to specify the percentage unbalance.

Harmonics and Inter-harmonics:

Harmonics are sinusoidal voltages or currents having frequencies that are integer multiples of the frequency at which the supply system is designed to operate(termed the fundamental frequency, usually 50).It originates in the non-linear characteristics of devices and loads on the power system. Voltages or currents having frequency components that are not integer multiples of the frequency at which supply system is designed to operate (e.g 50 or 60 hz) are called Inter-harmonics. Its main source are static frequency converters, cyclo-converters, induction furnaces, and arcing devices.

Notching:

It is a periodic voltage disturbance caused by the normal operation of power electronics devices when current is commutated from one phase to another. notches occur when the current commutates from one phase to another. During this period, there is a momentary short circuit between two phases pulling the voltage as close to zero as permitted by system impedances.

Noise:

It is defined as unwanted electrical signals with broadband spectral content lower than 200 khz superimposed upon the power system voltage or current in phase conductors ,or found on neutral conductors or signal lines. Noise in power system can be caused by power electronics devices, control circuits ,arcing equipment ,loads with solid rectifiers, and switching power supplies.

Voltage Fluctuations:

These are systematic variations of the voltage envelope or a series of random voltage changes ,the magnitude of which does not normally exceeds voltage range from 0.9 to 1.1 pu.

Power frequency Variations:

They are defined as the deviation of the power system fundamental frequency from its specified nominal value(e.g. 20 or 60 Hz).The power system frequency is directly related to the rotational speed of the generators supplying the system. There are slight variations in frequency as the dynamic balance between load and generation changes. The size of the frequency shift and its duration depend on load characteristics and response of the generation control system to load changes.

Components Description

The components used in our project are:

1.Step -Down Transformer

Specification: 220/12 V, 500 mA , 6VA

Description : The step-down transformer converts the high voltage(HV) and low current from the primary side to the low voltage(LV) and high current value on the secondary side. This transformer type has a wide application in electronics devices and electrical systems. When it comes to the operation voltage, the step-up transformer application can be roughly divided into two groups: LV(voltages up to 1 kV) and HV application (voltages above 1 KV).The first LV application refers to the transformers in electronics devices. Supplying the electronics circuits requires a low voltage value(12 V in our case).

Full wave Bridge Rectifier

Specification:IN4001

Description: A full wave rectifier is a circuit arrangement which makes use of both half cycles of input alternating current(AC) and converts them to direct current(DC).A full wave rectifier is much more efficient than a half wave rectifier. This process of converting both half cycles of the input supply(AC) to direct current (DC) is termed full wave rectification.

Working: During first half cycle of the input voltage ,the upper end of the transformer secondary winding is positive with respect to the lower end. Thus during the first half cycle diodes D1 and D*2 are forward biased and currrent flows through arm EB, enters the load resistance R_L,* and returns back flowing through arm DC .During this half of each input cycle, the diodes D3 and D4 are reverse biased and current is not allowed to flow in arms EC and AF.

During second half cycle of the input voltage ,the lower end of the transformer secondary winding is positive with respect to the upper end. Thus diodes D3 and D4 become forward biased and current flows through arm FA, enters the load resistance R_L, and returns back to the source flowing through arm EC. Flow of current has been shown by dotted arrows in the figure. Thus the direction of flow of current through the load resistance R_L remains the same during both half cycles of the input supply voltage.

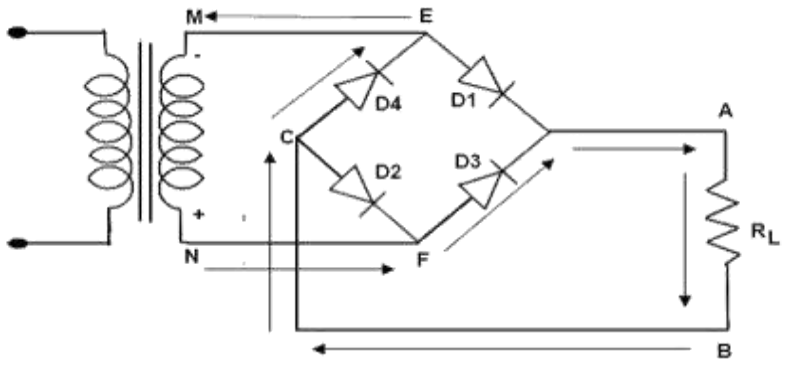

Potentiometer

Specification:0-10 kilo ohm

Description: A potentiometer ,informally a pot, is a three - terminal resistor with a sliding or rotating contact that forms an adjustable voltage divider. If only two terminals are used ,one end and the wiper, it acts as a variable resistor or rheostat.

Arduino:

Description: Arduino/Genuino Uno is a microcontroller board based on the ATmega328P.It has 14 digital input/output pins (of which 6 can be used as PWM outputs),6 analog inputs, a 16 MHz quartz crystal ,a USB connection, a power jack, an ICSP header and reset button. It contains everything needed to support the microcontroller. simply connect it to a computer with a USB cable or power it with an AC-to-DC adapter or battery to get started.

It can be programmed with the (Arduino Software (IDE)).The ATmega328 on the Arduino/Genuino Uno comes pre programmed with a boot loader that allows you to upload new code to it without the use of an external hardware programmer.

Relay Board:

Specifications: 5 VDC (Relay Power) ,3.3-5 VDC (Input Signal), 85 mA (Relay Power).

Description: It is an electrically operate switch. It is used where it is necessary to control a circuit by a separate low power signal ,or where several circuits must be controlled by one signal.

It can also be used to turn lights, fans and other devices on/off while keeping them isolated from the microcontroller. The Single Relay board allows us to control high power devices (up to 10A) via the on-board relay.

LED:

Description: A light - emitting diode(LED) is a two -lead semiconductor light source. It is a p-n junction diode, which emits light when activated. There is a effect called electroluminescence ,it occurs when a suitable voltage is applied to the leads and the electrons are able to recombine with electron holes within the device, releasing energy in the form of photons.

LCD:

LCD is an electronic display module which uses liquid crystal to produce a visible image. The 16*2 LCD display is a very basic module commonly used in DIYs and circuits. The 16*2 translates to a display with 16 characters per line in 2 such lines. In this LCD each character is displayed in 5*7 pixel matrix.

VEE pin is meant for adjusting the contrast of the LCD display which is done by connecting one end of a POT to the Vcc(5V), other end to the Ground and connecting the center terminal (wiper) of the POT to the VEE pin.

An LCD has two built in registers namely data register and command register .Data register is for placing the data to be displayed , and the command register is to place the commands. High logic at the RS pin will select the data register and low logic at the RS pin will select the command register. If we make the RS pin high and the put a data in the 8 bit data line (DB0 to DB7), the LCD module will recognize it as a data to be displayed. IF we make RS pin low and put a data on the data line, the module will recognize it as a command.

Block Diagram of Circuit:

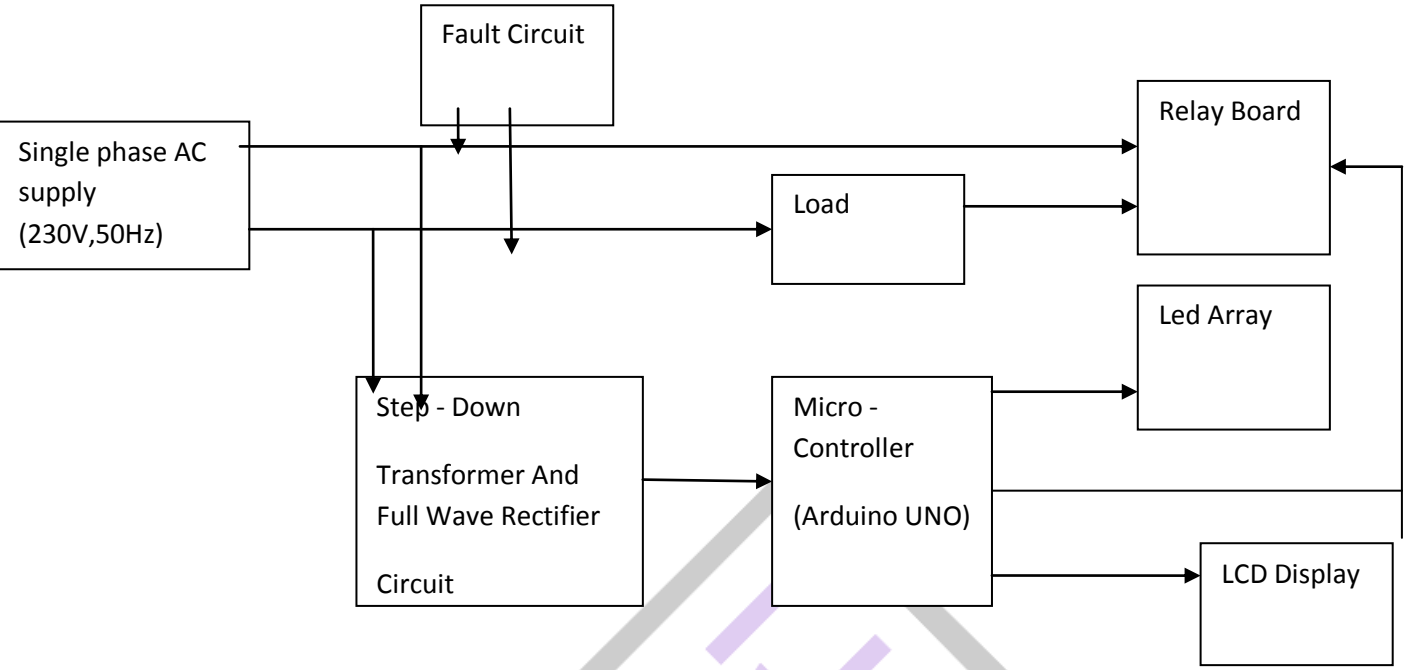

In order to simulate and indicate various faults that can occur in a single phase electrical system, a circuit represented by the above block has been employed. It consists of:

Single Phase AC supply

It is required to give an input to the circuit

Fault Circuit:

It simulates fault conditions by varying the voltage in the circuit.

Step-Down Transformer And Full Wave Rectifier Circuit:

It step-down and fully rectifies the voltage to be fed to the micro controller through a potential divider circuit.

Micro-controller:

It samples the input voltage endlessly and identifies the fault that occurs instantaneously.

LED Array & LCD Display:

They are used by the micro-controller to display the fault occuring at every instant.

Relay Board:

It is used to break the circuit when severe fault conditions occur.

Picture Of Working Model:

Flowchart

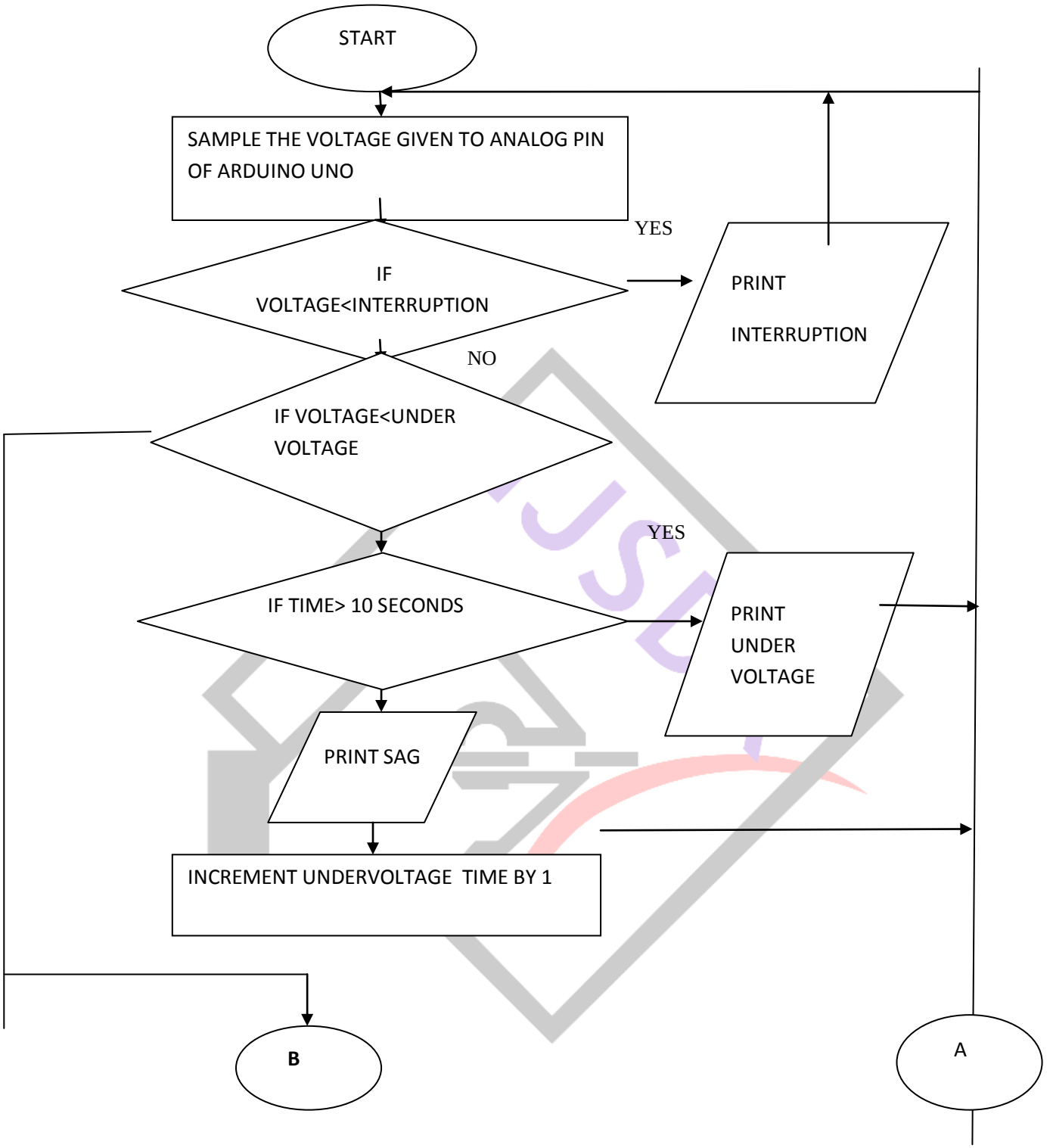
START
SAMPLE THE VOLTAGE GIVEN TO ANALOG PIN OF ARDUINO UNO
IF VOLTAGE<INTERRUPTION
YES
PRINT INTERRUPTION
NO
IF VOLTAGE<UNDER VOLTAGE
YES
IF TIME> 10 SECONDS
PRINT UNDER VOLTAGE
PRINT SAG
INCREMENT UNDERVOLTAGE TIME BY 1
B
A

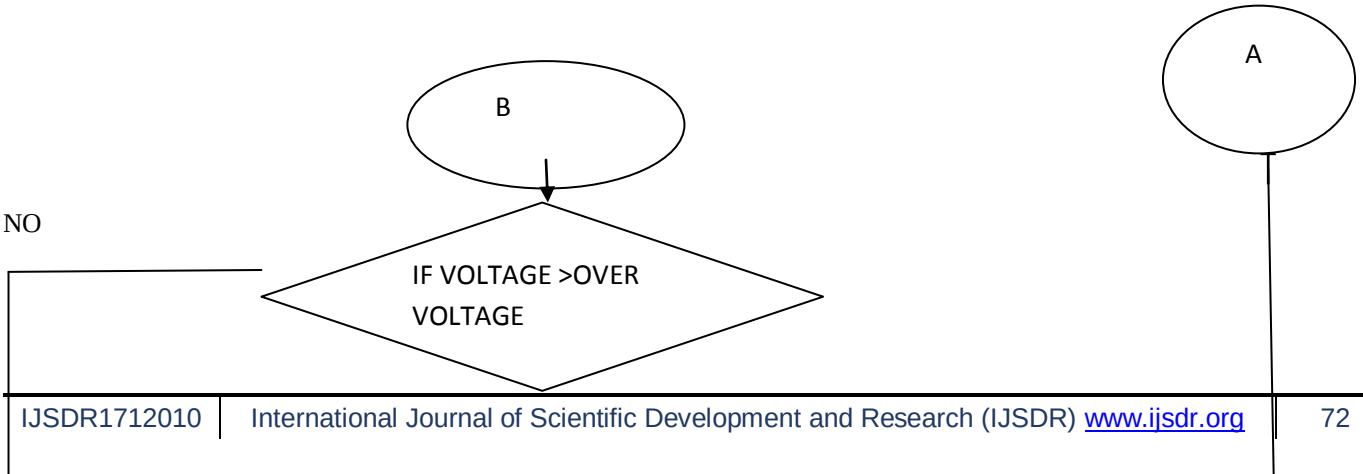
A
B
NO
IF VOLTAGE >OVER VOLTAGE

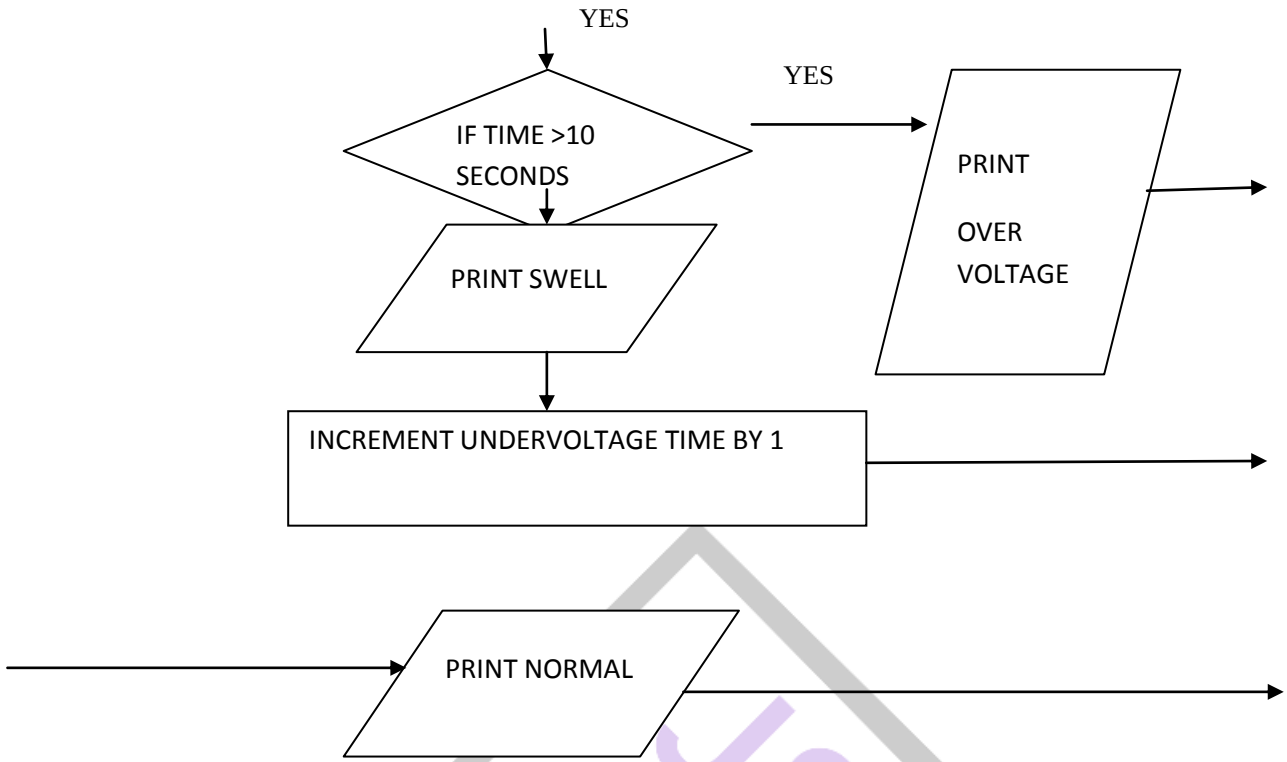

CONCLUSION:

The exponential increase in the usage of voltage - sensitive equipments has created the need to monitor the voltage quality of the supply. This shows the importance of studying the various types of voltage quality issues that exist in an ac power system.

After a thorough study of these issues, a solution has been suggested to protect equipments

that are highly voltage-sensitive from the commonly occurring voltage variations. This helps in not just protecting these equipments but also in increasing the life span of the same.

References:

"Voltage Sag Analysis Case Studies", William Jones, Dave Mueller, Paul Vinet , IEEE Publication.

"Overview of Voltage Sag Mitigation", A Sannino , M.G Miller, M.H Bollen, IEEE Publication.

"Voltage Sag Characterization in a Distribution System", Suresh kamble, Chandrasekhar Thorat, Journal of Power and Energy Engineering.