FLEXI MULTIRADIO 1O BTS AUTOMATION ON RRH CONFIGURATION

GLADYS M[1], DR.BYRA REDDY.C.R.[2], Thejaswini K N[3]

[1]Student, [2]Professor, [3]R & D Specialist
[1,2]Bangalore Institute of Technology, [3]Nokia Networks and Solutions PVT.LTD
Bangalore, Karnataka

***Abstract*: GSM (Global System for Mobile Communications, originally Groupe Special Mobile), is a standard to describe technologies for second generation digital cellular networks. Aside from ordinary Base Station Transceiver (BTS), Flexi Multiradio 10 BTS is utilized. It is effective as far as power utilization, minimal effort and is more adaptable due to its conservative size. The product requirements for this base station should be changed, as indicated by user necessities. In the current Digital world, Software enterprises, government association and other IT ventures has the need of business over the world has concentrated on quality and reliability delivered software through process and technology. Since it is difficult and hectic for the architects to test physically, automation of software instances of Flexi-BTS software package is favoured which is accomplished by continuous Integration automation testing utilizing RIDE software tool and executed through Jenkins .This paper contributes the study of Automation Flexi Multiradio 10 Base Station on Remote Radio Head configuration which has a unique feature called "Composited Multi Site Transmission". This feature enables to control the power of each antenna separately and also reduces Handovers of the calls. Through this paper we analyse how the Flexi BTS is automated and Test cases scenarios are written and executed.**

***Keywords*– Continuous Integration, Composited Multi Site Transmission (CMST), RIDE, Jenkins, Test cases**

Introduction*:* In recent years there is gigantic upgrade in software enabled systems however the real concern is about software reliability and security. Software testing ensures the reliability,quality and subsequently builds the user certainty **[1].** There are numerous open source and cost effective tools are accessible for enhancing software quality by reducing the Software defects which protects the reliability,quality and consequently builds the customer confidence. In present the majority of Research search is done on software testing procedures however for quicker advancement and software improvement this field is developing for enhancing software quality by reducing the software defects.

This paper shows how the automation testing process known as continuous Integration is implemented on Flexi Multiradio 10 Base System in a real time application called Remote Radio Head Configuration and also the hardware and software tools used for the same implementation in the following sections .

Continuous Integration: Continuous integration (CI) can help in reducing assumptions on a project by rebuilding software whenever a change occurs in a version-control system **[2].** CI is about the fundamentals. It may not be the most important activity in software development, but integrating software is vitally important in today's complex projects."A product improvement done where individuals from a group coordinate their work every now and again; generally, every individual coordinate in any event day by day prompting different mixes every day. Every joining is confirmed by a computerized manufacture (counting test) to recognize incorporation blunders as fast as could be expected under the circumstances. Numerous groups find that this approach prompts altogether diminished coordination issues and enables a group to create firm programming more rapidly".Some consider CI to be a procedure of just assembling software parts. We consider CI to be the center point of software improvement, as it guarantees the soundness of software through running a work with each change. Deciding the nature of software can be as simple as checking the latest integration build.

REMOTE RADIO HEAD: In Composite Multi Site Transmission feature, antennas at different locations are merged into one single logical cell, or composite cell, which helps in reducing the inter-cell handover. The BTS is connected to multiple antennas (nodes) that are not co-located. A maximum of six nodes are allowed in one BTS [3]. In the event that the transmitting and receiving antennas are picked accurately for each connection, the coverage in the cell moves toward becoming a union of coverage areas of individual antennas.

Thus, the coverage can be improved without expanding the number of cells and the number of handovers. All together to minimize inter cell handovers, the non-co-located antennas are converted into a single cell. The feature decreases inter cell handovers as shown in fig 1 in, for instance, multi-floor destinations there by improving network performance. The user can travel out starting with one node then onto the next inside the logical cell without a handover. Inter-cell handover is required just while moving starting with one logical cell then onto the next.

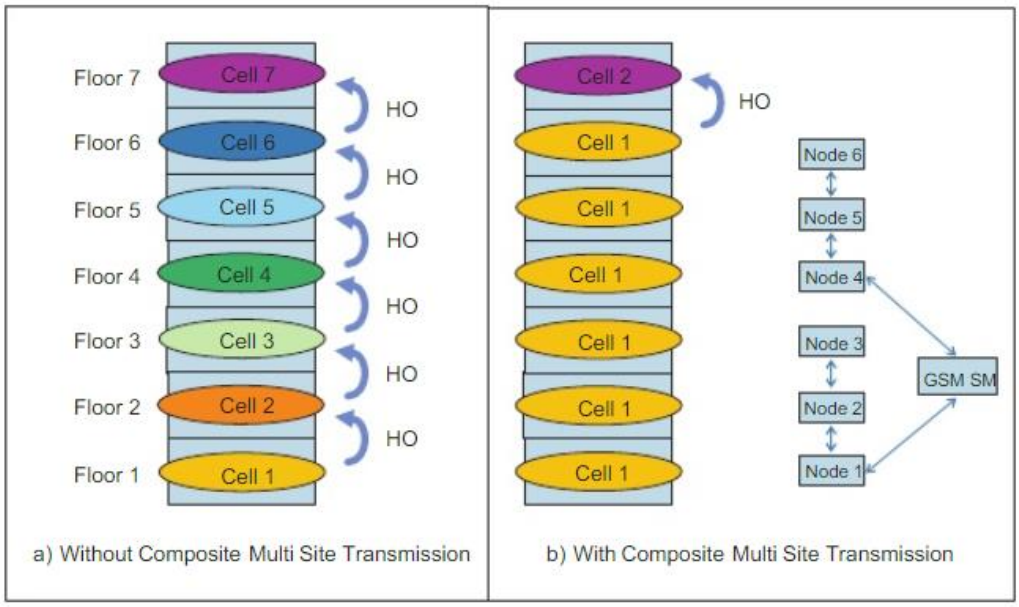

Fig 1: Composite cell concept in multi-floor solution

Implementation

AUTOMATION FRAMEWORK

The automation framework architecture shown in Fig 2 gives the outline about the hardware condition (BTS Module), software package (Flexi BTS Software bundle) and the Software Unit (received computerization structure instruments) for quality evaluation. The entire modernized test cases would be executed as a Test Suite which includes Hardware Unit and Software Unit. The required hardware, software tools and software virtual PC's are explained later in the following sections. The interconnections between the various elements in the automation Framework can be viewed in the fig 2.

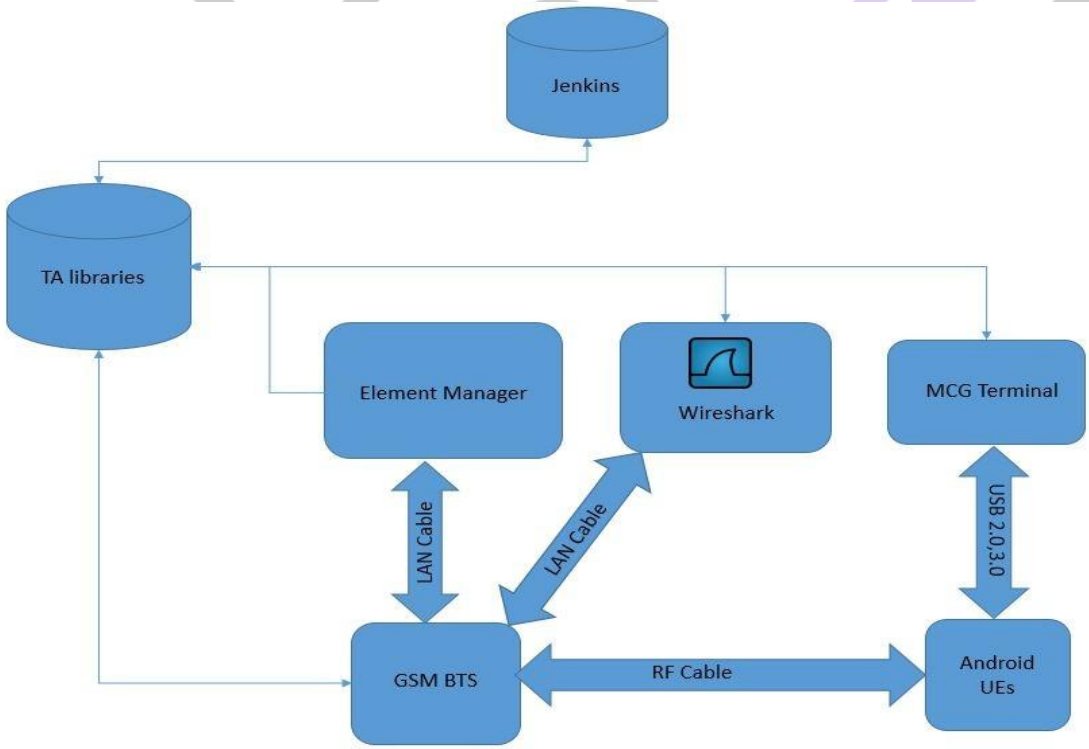

Fig:2 Automation Framework Architecture Diagram

Hardware Implementation

Flexi Multiradio10 Base Station : an industry-leading, cost and energy-efficient multi-radio base station for Single Radio Access Network (RAN) advanced mobile broadband networks is an example of efficient site design and management by Nokia Siemens Networks **[4].**It supports the following radio access technologies in all needed frequency variants: GSM/EDGE, WCDMA, HSPA and HSPA evolution, LTE TDD/FDD. The Flexi Multiradio10 Base Station which is implemented in outside world is shown in fig 3.The components of Flexi Multiradio10 Base Station are System Module and Radio Frequency Module or Remote Radio Head which is shown in fig 4.accrding to the required needs the Radio Frequency Module or Remote Radio Head is connected to the System Module.For large coverage areas Radio Frequency module is connected and for less coverage areas Remote Radio Head is connected. The scope of the Flexi Multiradio BTS will be:

- To support 2G,3G, LTE in dedicated mode and in concurrent mode.
- To help essential and broadened GSM900 MHz frequency band
- To help GSM850 MHz frequency band.
- To help PCS1900 MHz frequency band (3GPP working band II).
- Maximization of site re-use in the GSM modernization.

Fig : 3 : Flexi Multiradio 10 Base station

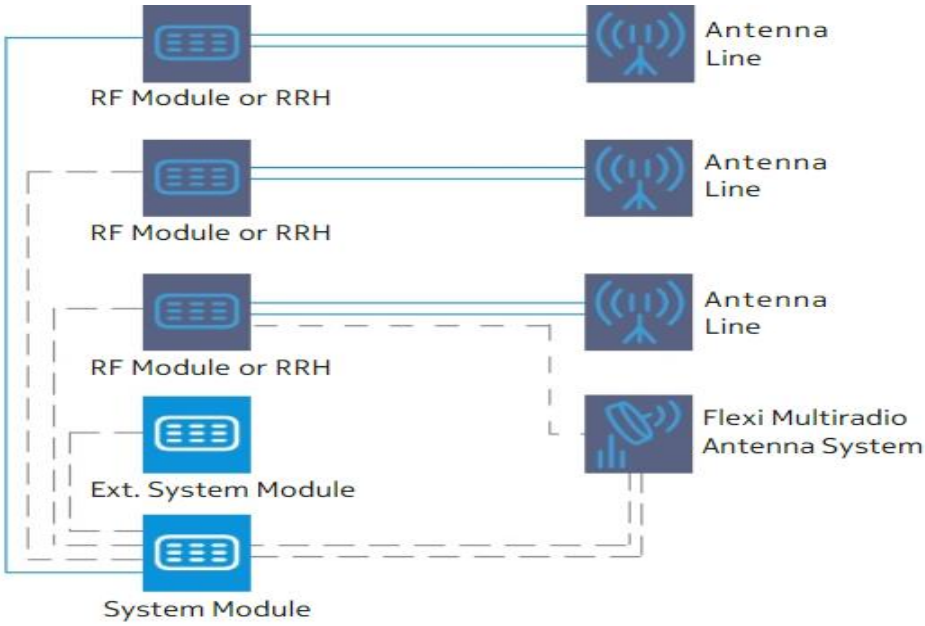

Fig : 4: Components inside the Flexi Multi radio 10 base station

REMOTE RADIO HEAD HARDWARE

Nokia Flexi Radio Antenna System brings the leanest site solution for high capacity macro sites with two bands using simultaneous 2Tx MIMO and 2-Way Rx Diversity. It allows a simple cell site design and minimizes operational Flexi RRH 4-pipe 120W expenses .Flexi RRH 2-pipe 120W can run HSPA+ and LTE on one GSM radio head while maintaining GSM services. Flexi RRH 2-pipe offers two transmission and reception paths to support advanced antenna schemes.[5] The "Composited Multi Site Transmission" feature needs tow or more RRH modules (FHxx and FHxx are the required GSM frequency Bands). The Remote Radio mounted on the wall is shown in the fig 5

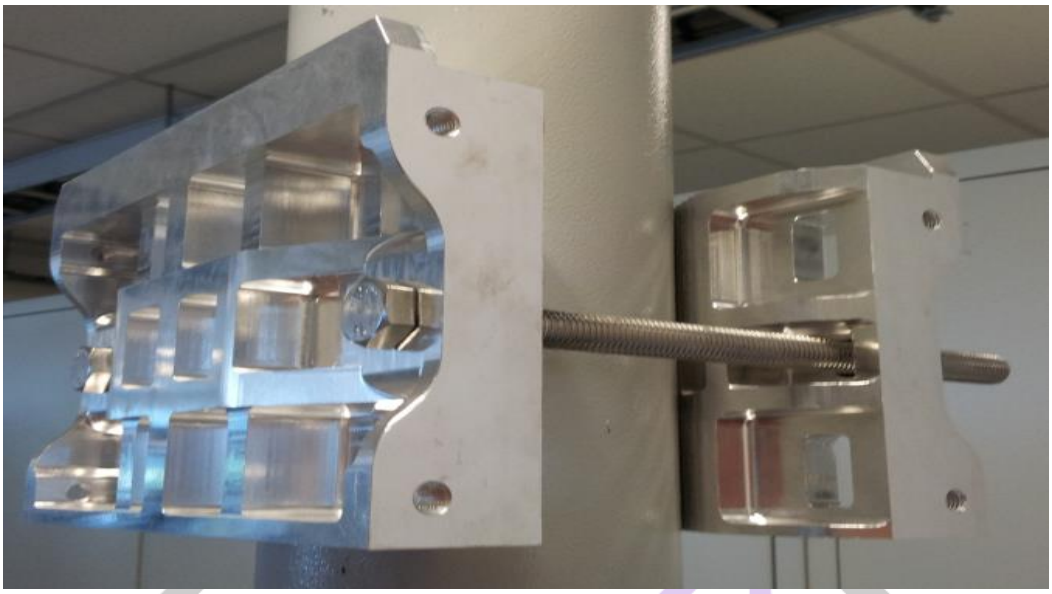

Fig: 5: RRH Mounted on wall

SOFTWARE IMPLEMENTATION

- **ELEMENT MANAGER:** is an administrator utilized to control BTS locally and remotely. Element Manager is an application that keeps running on the user workstation /Pc on the most recent Windows Oss. The graphical UI which is shown in fig 6 of the EM makes simple for the user to work on. The fundamentals elements of BTS manager are BTS authorizing, BTS supervision (Alarms, Lock/unblock),BTS working state and BTS testing.

- **Control PC** requires the RIDE which is shown in fig 7 to be introduced in this which is NOKIA restrictive programming. Control PC requires a java form which fills in as slave for Jenkins run. Python 2.7, wxPython, robot system and Ride are the product's that should to be introduced in control pc.

- **Mobile Call Generator PC (MCG PC)** is a remote PC which is shown in fig 8 where User Equipment (Mobile) is associated. RRH Transmitter would be arranged by the cell phone which is available in RF box. The RF box is the centralizes all frequencies that cell phone latches and detaches just frequency got from BTS. MCG PC is utilized to make the calls remotely where all the information of mobile like IMSI and IMEI, LAC and CI data will be present.

- **Wireshark PC** is an open-source protocol analyser that runs on Windows and Unix platforms**[6]** which is shown in fig 9. Initially known as Ethereal, its principle objective is to analyze and additionally being an outstanding, simple to-utilize application for analysing communications and resolving network problems. Wireshark implements a range of filters to see the operation and maintenance messages near the BTS and BSC interface.

- **JENKINS :** Jenkins is an independent, open source Automation Server, which can be used for testing, building and deploying the software **[7]** The principle task of the jenkins is to execute the activity at predefine interval of time , time interval should to be set previous execution in jenkins. Jenkins keeps up the result of previous build and each build status can be sent to concerned individual or team as shown in fig 10. Jenkins takes after master slave architecture, master runs the job on slaves running on many platforms.

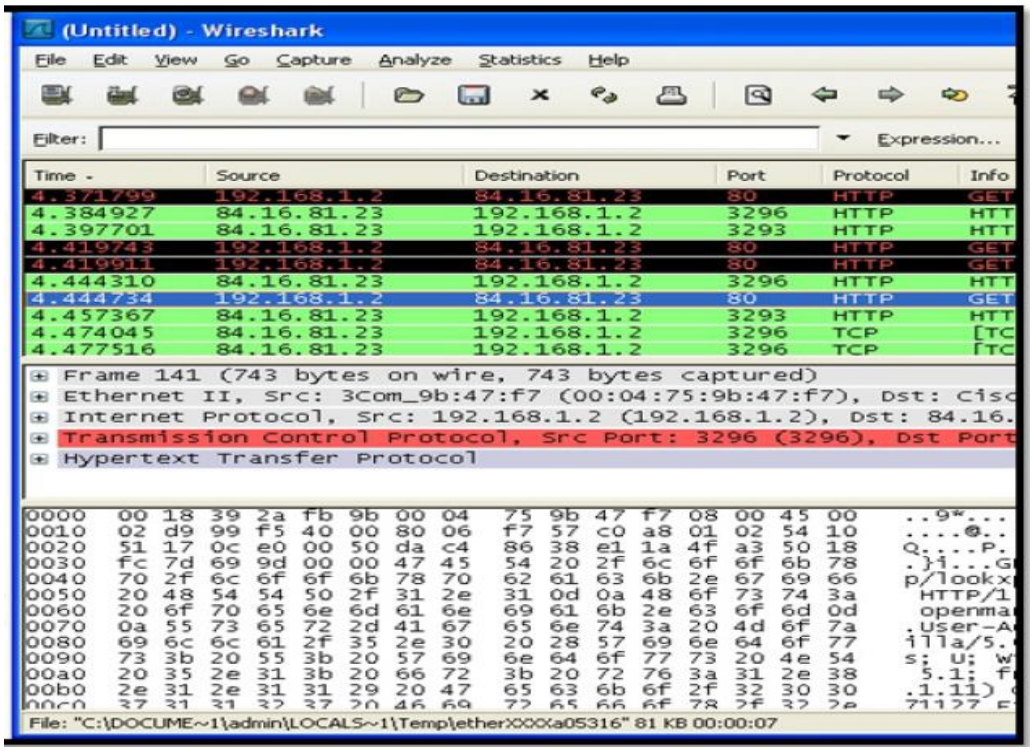

Fig: 9 Wirshark PC

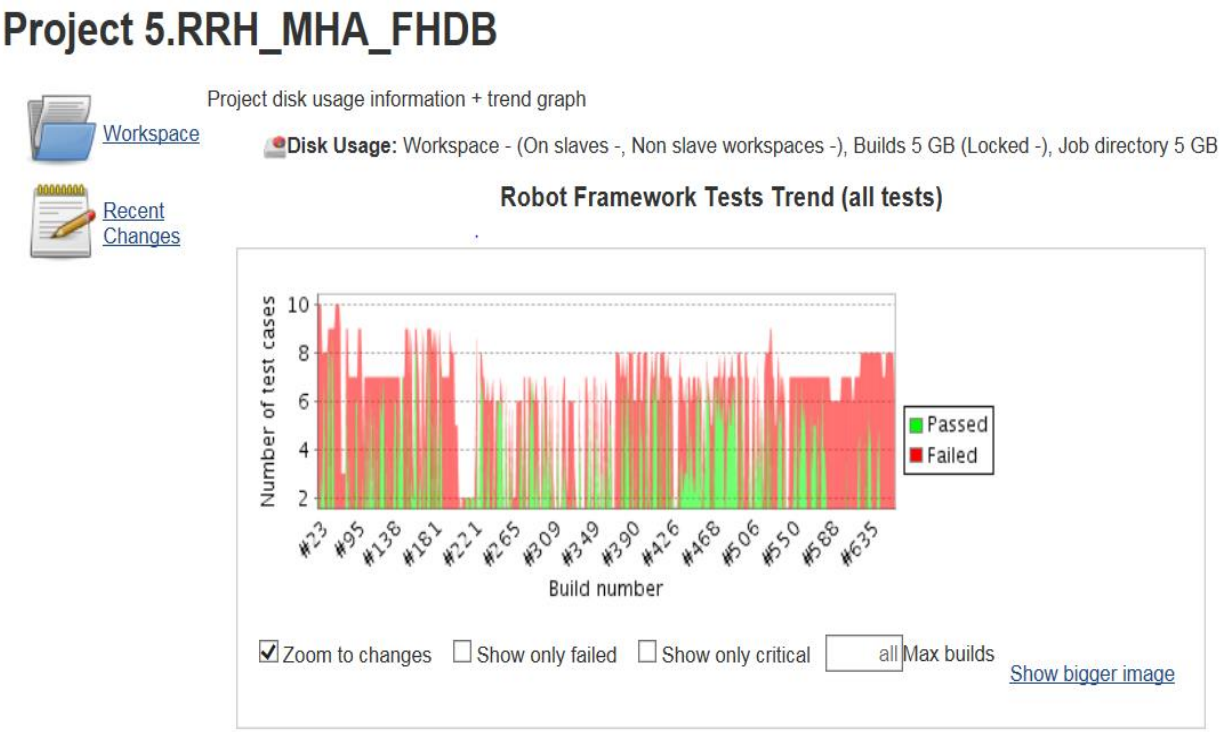

Fig: 10: Jenkins Page

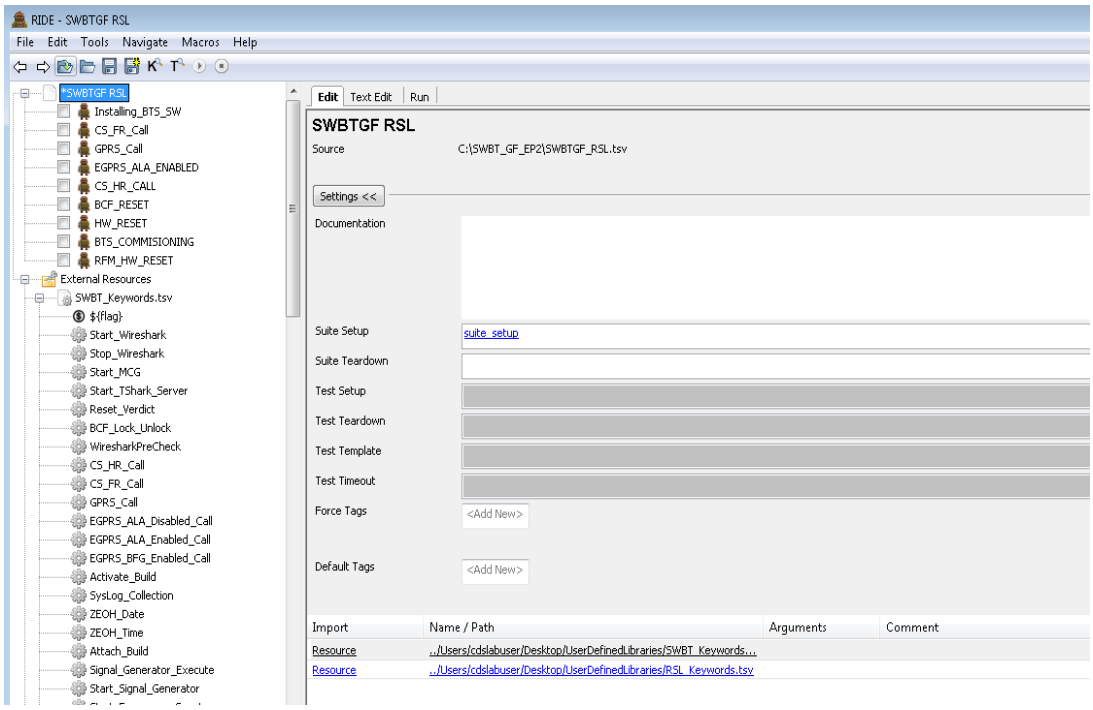

Fig :7: RIDE In Control PC

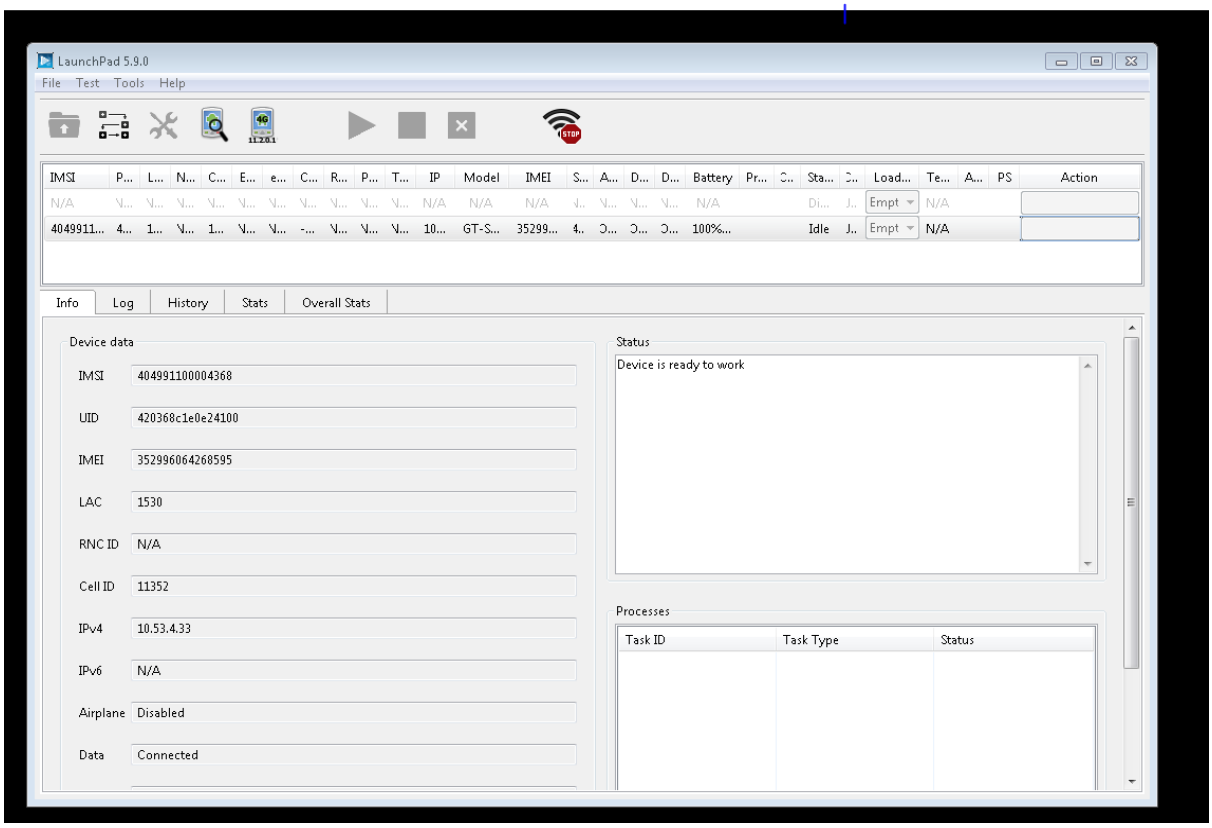

Fig:8: MCG PC

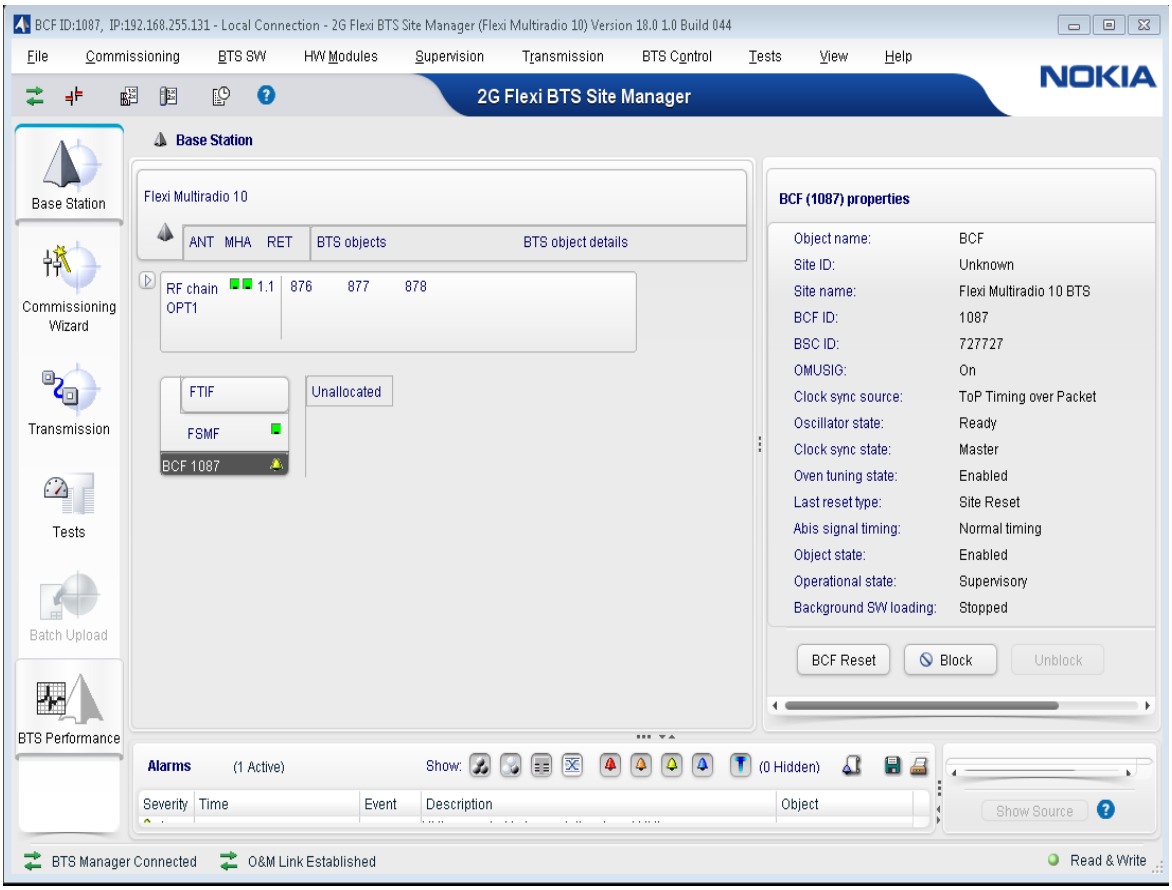

Fig:6:Element Manager (FLEXI BTS Manager)

PROPOSED METHODOLOGY

The following block diagram shown in fig 11 is the proposed automation framework in automating the Flexi Multiradio 10 Base Station for Remote Radio configuration.

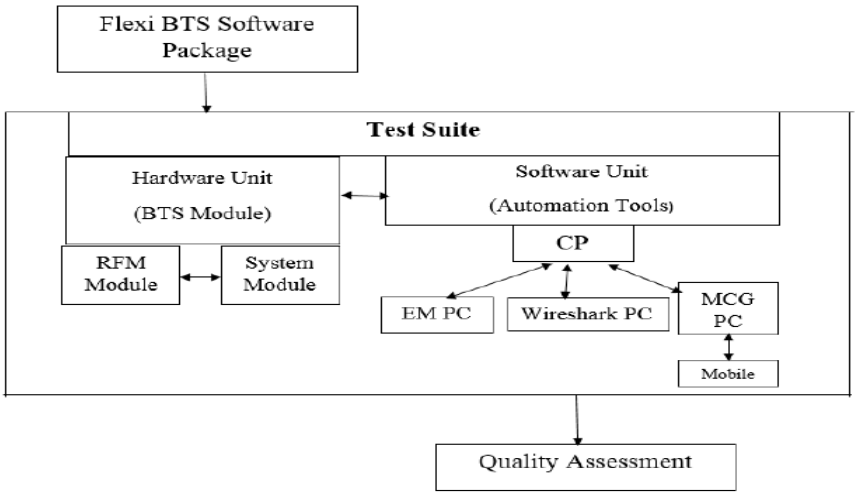

Fig 11: Proposed automation framework

RIDE: Robot Framework provides graphical user interface called RIDE (Robot Integrated Development Environment) .RIDE help in managing test cases and keywords written in Resource Files. Test cases are bundled in so called Test suites. Test suites are defined in some external file and that file is then called a Resource File.Three artefacts developed for writing tests using the *Robot Framework*:

- Test suites: This is where test cases are implemented.

- Resource Files: From a test-design point of view one will almost always define own higher-level *keywords*.
- Test Library: Typically you are not required to write new technical keywords.

TEST CASE SCENARIOS: The following are the few test cases implemented on BTS and BSC**.** All these cases are mechanized through RIDE and JENKINS as shown in fig 7 and fig 10.

- **Background SW download to BTS from BSC:** Software downloading occurs through element Manager and through BSC and is checked the latest build is installed and working fine with no alarms.

- **BTS Object behavior when Flexi Remote Radio Head is HW Reset:** The hardware's used in RRH i.e. FHxx and FHxx is given reset and the behavior of the hardware's is checked. Here alarms at BSC and the BTS side should not be present and also hardware's faulty is verified.

- **Lock Unlock of BTS objects from BSC:** In this case the number of BTS sectors created in this undergoes lock and unlock and during this process calls like circuit switched and packet switched calls has been placed, to check none of the alarms should be present and calls should not be dropped at any point of time.

RESULTS

The results of the test case scenarios when all the test steps are executed without any failures is indicated in Green colour which is shown in fig 12 in RIDE execution as explained in software unit i.e. Control PC and also Jenkins execution is shown in fig13.

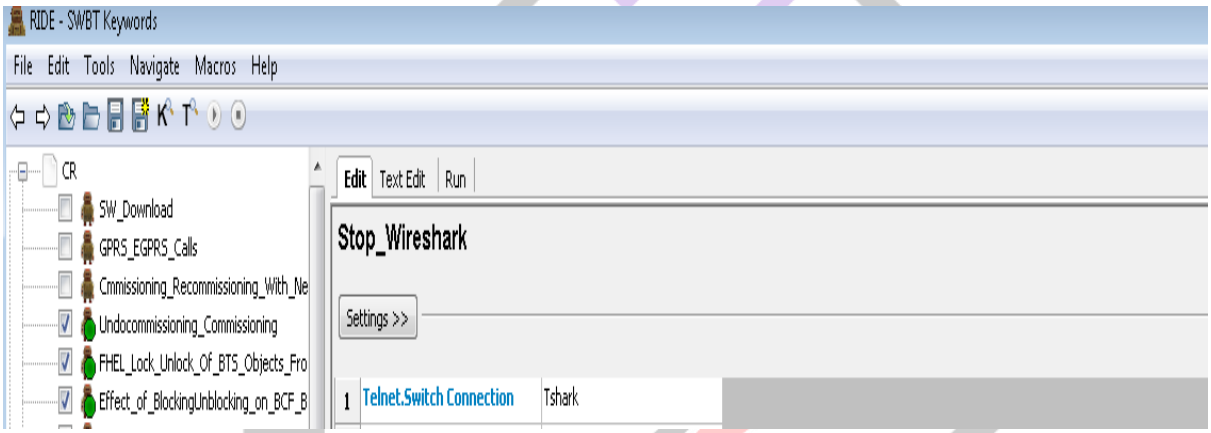

Fig 11 Test case Execution in RIDE Software

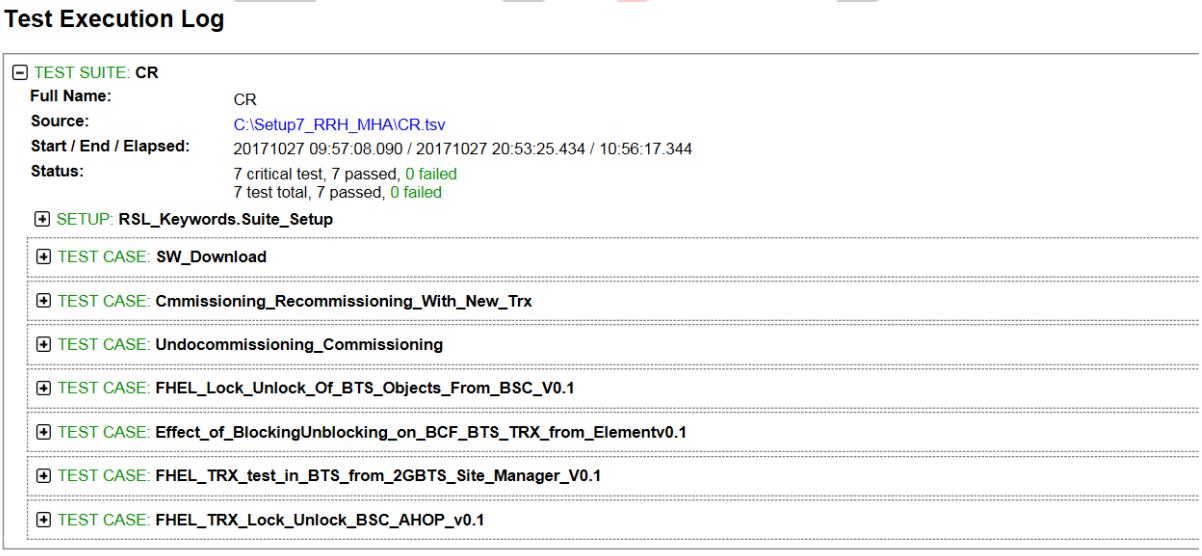

Fig: 12: Test Case Execution in Jenkins.

V Conclusion

Continuous Integration Automation Testing is a necessary on complex tasks because it has the advantages, it gives on right on time detection of the issues. Since the test will be automated and will have less dependency on test engineers and it eliminates the training time required for test engineers . The human intended errors will be reduced. By using Flexi Multiradio 10 Base Station where 2G,3G, LTE RF technologies can be used in a single hardware and the composited multi-site transmission which reduces the handovers of the calls which will Enhance the call duration and also implementing CI using Jenkins will lead to better performance.

REFERNCES

[1] Mohamad Kassab (2016 IEEE) ,"Software Testing Practices in Industry: The State of the Practice"

[2] https://www.javaworld.com/article/2077731/build-ci-sdlc/introducing-continuous-integration.html

[3] https://www.scribd.com/doc/297657450/Flexi-Multiradio-10-Bts-Edge-Feature-Descriptions

[4] "Multiradio Base Station makes network evolution easier and greener than ever", Press Release Feb 5 2009, Nokia Siemens Networks. Available at: http://www.nokiasiemensnetworks.com/sites/default/files/document/Nokia Siemens Networks 2009 0205 enFlexiMultiradioBTS.pdf

[5] https://networks.nokia.com/products/flexi-multiradio-10-base-station

[6] https://www.researchgate.net/publication/282385189

[7] Arpitha R& Mrs. Kavitha S N (2017)Automation Using Jenkins: Plugins, Test Design, Test Execution and Reporting Imperial Journal of Interdisciplinary Research (IJIR)Vol-3, Issue-5, ISSN: 2454-1362.