Design and Analysis of Tie rod of Tractor under buckling

[1]Balu B. Gavhane, [2]Prof. V. G. Bhamre, [3]Prof. B. C. Londhe

[1]Lecturer, [2]Head of Department, [3]Professor
Mechanical Engineering Department
Santosh N. Darade Polytechnic, Nashik, India

***Abstract*—A tie rod is a slender structural rod in the automobile steering system and it is capable of carrying tensile and compressive loads. Tie rod may fail due to compressive loads through buckling. Failure of tie rod may cause instability of vehicle and can cause an accident. So it's important to check the strength of tie rod. The load coming on tie rod is mostly compressive. In this project we are going to do the finite element analysis of the existing tie rod of the tractor and will compare those with the FEA results of optimized tie rod. All the measures will be taken to improve the strength of the tie rod. 3D modeling of a tie rods done in CATIA V5R19. Further, meshing and analysis is done on HYPERMESH (pre-processor) and ANSYS (postprocessor). Optimization of the tie rod will be carried out in iteration with topological changes. Optimized tie rod will be analyzed through FEM. After getting satisfied results a prototype will be fabricated and tested. The two results i.e. FEA and experimental results will be validated**

***Keywords* – Tie rod, CATIA V5R19, Finite Element analysis.**

I. INTRODUCTION

The steering system is a group of parts that transmit the movement of the steering wheel to the front, and sometimes the rear, wheels. The primary purpose of the steering system is to allow the driver to guide the vehicle. The steering system is made up of three major parts: the steering box, the suspension parts and the steering linkage. The steering box connects to the steering wheel, the suspension parts pivot the wheel assembly, and the steering linkage connects the steering wheel to the front wheels. The primary function of the steering linkage is to translate movement to the front wheels.

A tie rod is the one the most critical linkage in the steering system of a vehicle. A tie rod is a slender structural rod that is used as a tie and capable of carrying tensile and compressive loads. The tie rod transmits force from the steering center link or the rack gear to the steering knuckle. This will cause the wheel to turn. As the ratio of its length to the radius of gyration of its cross section is normally quite large, it would likely buckle under the action of compressive forces. When it becomes worn out, steering will become more difficult there by producing clunking noise.

The vehicle will also typically be pulling or (dragging) to either side (left or right). Thus the aim of the project is to analyses tie rod to improve the mass and buckling load of tie rod. The objectives of this study are to carry out the simulations on tie rod and validate it experimentally. Finite Element Analysis (FEA) is the most powerful technique for strength calculations of the any structures working under known load and boundary conditions. FEA approach can be applied for the optimization. 3D model of a tie rod will be drawn in CATIA V5R19, Meshing will be carried out in Hyper mesh, and Ansys will be used for post-processing. Different designs of tie rod i.e. in circular shape, hexagonal shape etc. with varying thickness will be analyzed to find better results.

In this project we have undertaken, we are going to do the finite element analysis of the existing tie rod within the boundary conditions under compressive load. The finite element analysis will give us the stress concentration regions which will help us in optimizing the design of the tie rod. Based on these FEA results, tie rod will be modified for different cross sections and topology. Then this modified design of tie rod will be analyzed through FEM for different topological changes in iteration. This iterative approach will give us the optimum design. Optimized design of a tie rod will be fabricated and will be tested experimentally on UTM to validate the FEA results.

Fig. 1 Commercial vehicle tie rod

II DESIGN OF THE TIE ROD

Design of Tie Rod

The chapter Design of tie rod of dissertation includes design of existing tie rod of Mahidra 415 di Tractor. Dimensions of the existing tie rod have been measured from market and CAD model of a tie rod have been prepared in CATIA V5. The finite element analysis is carried out by using Hypermesh and ANSYS as post-processor.

CAD (Computer-Aided Design)

Computer-aided design (CAD), also known as computer aided design and drafting (CADD), is the use of computer technology for the process of design and design documentation. Computer Aided Drafting describes the process of drafting with a computer. CADD software, or environments, provides the user with input-tools for the purpose of streamlining design processes; drafting, documentation, and manufacturing processes.

CAD is mainly used for detailed engineering of 3D models and/or 2D drawings of physical components, but it is also used throughout the engineering process from conceptual design and layout of products, through strength and dynamic analysis of assemblies to definition of manufacturing methods of components. It can also be used to design objects.

Mahindra 415 di Tractor is used for the project work. Dimensions are taken through reverse engg. Dimensions for tie rod were measeured from site. This dimensions taken from the actual model of tie rod were used for 3D modelling of tie rod. Below are some of the images taken at site.

A rough hand sketch was drawn showing all the dimensions of tie rod. Dimensions are required for calculating of boundary conditions. Hence its CAD model is necessary. CAD model then is made by the commands in CATIA of Pad, pocket, fillet, and geometrical selections in part design module. Parametric generation of drawings will help to get the dimensions useful in forces calculations in static loading conditions.

Fig. 2 Measurement of Outer Diameter of tie rod at site.

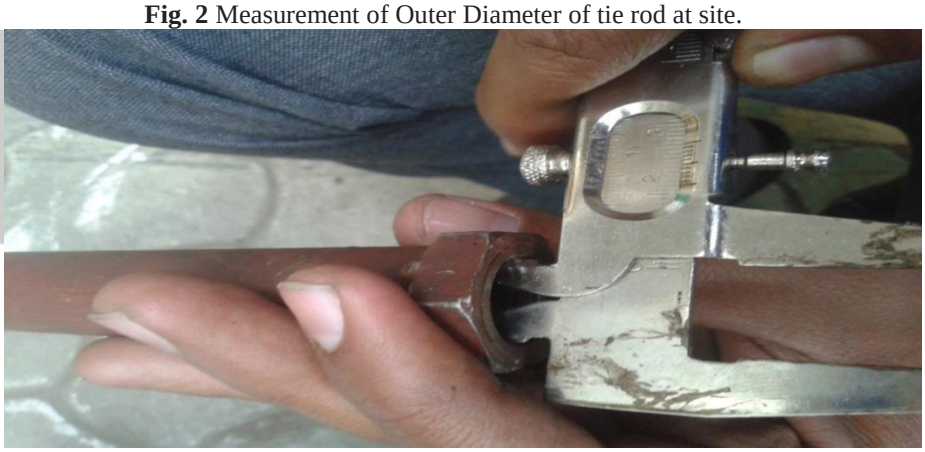

Fig.3 Measurement of Inner Diameter of tie rod at site

Fig.4 Measurement of Length of tie rod.

Fig.5 Measurement of Diameter of nut of tie rod.

CATIA

Computer **A**ided **T**hree dimensional **I**nteractive **A**pplication (**CATIA**) is a software from Dassault systems, a France based company. CATIA delivers innovative technologies for maximum productivity and creativity, from the inception concept to the final product.

CATIA provides three basic platforms-

- P1 for small and medium sized process oriented companies that wish to grow towards large scale digitized product definition.
- P2 for advanced design engineering companies that require product, process, and resource modelling.
- P3 for high-end design applications and is basically for automotive and aerospcae industry, where high quality surfacing is used.

CAD Model of Tie Rod of Tractor in CATIAV

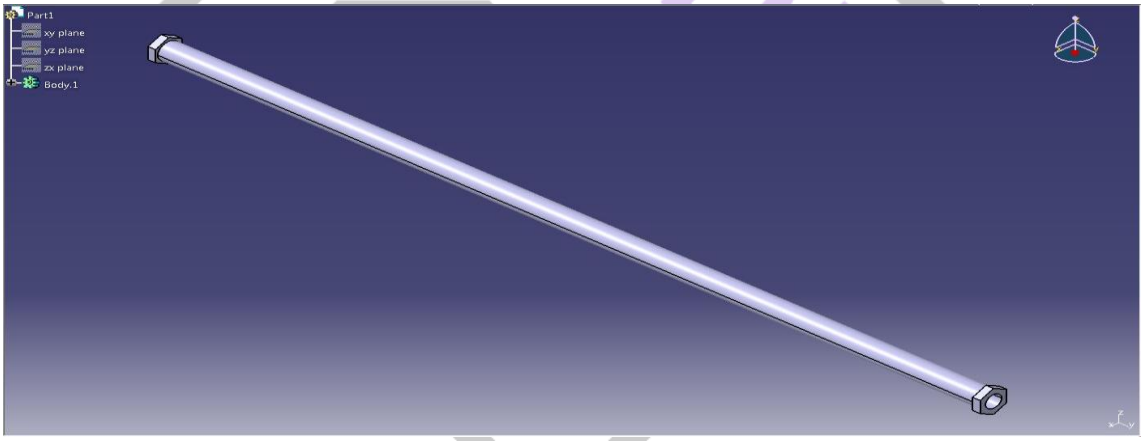

Fig.6 CAD Model On CATIA V5

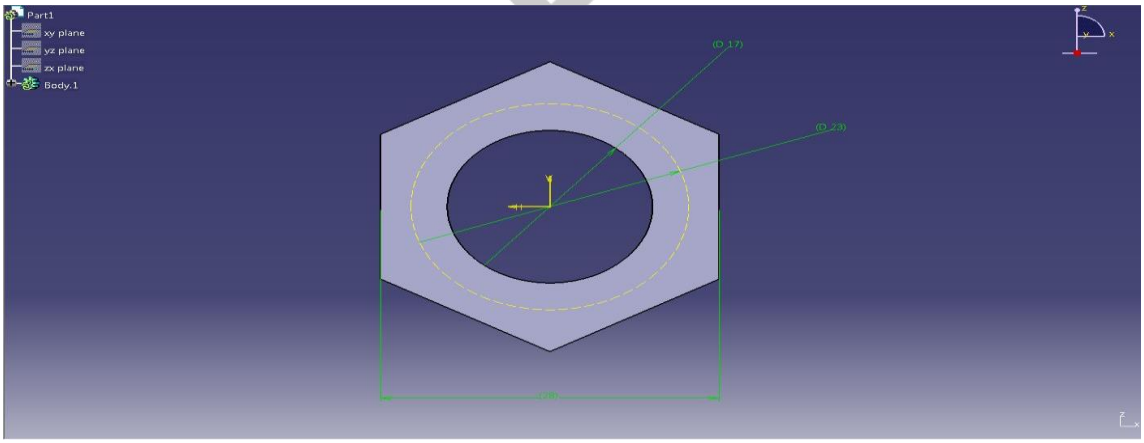

Fig.7 CAD Model On CATIA V5

References

[1] C. Gentilini,A.Marzani n, M.Mazzotti, "Non destructive characterization of tie-rods by means of dynamic testing, added masses and genetic algorithms "Journal of Sound and Vibration 332 (2013), pp76–101.

[2] Marco Andrea Pisani "Theoretical approach to the evaluation of the load-carrying capacity of the tie rod anchor system in a masonry wall" Engineering Structures 124 (2016), pp85–95.

[3] Pradeep Mahadevappa Chavan, M M M Patnaik, "Performance Evaluation Of Passenger Car Tie Rod Using Numerical And Theoretical Approach With Different Materials", International Journal of Research in Engineering and Technology eISSN: 2319-1163 | pISSN: 2321-7308.

[4] MSc. IsmarAlagić, "Fem Simulation Of Tie-Rod Tensile Test", 10th International Research/Expert Conference, "Trends in the Development of Machinery and Associated Technology" TMT 2006, Barcelona - Lloret de Mar, Spain, 11-15 September, 2006.

[5] Ganesh B. Baraskar1 Dr.V.S. Joshi2, "Performance Evolution of Tie Rod in Suspension System of Car using Finite Element Approach",International Journal for Scientific Research & Development| Vol. 3, Issue 11, 2016 | ISSN (online): 2321-0613.

[6] Wei Duan a, Suraj Joshi, "Failure analysis of threaded connections in large-scale steel tie rods", Elsevier, Engineering Failure Analysis 18 (2011) 2008–2018.

[7] Kiran S Sankanagoudar, Dr.H.K.Amarnath, Prashant D. Bagalkot, Mukund Thakur4, "Finite Element Analysis Of Tie-Rod For Spacecrafts", International Journal of Advanced Technology in Engineering and Science, Volume No.02, Issue No. 06, June 2014 ISSN (online): 2348 – 7550.

[8] Ganesh B. Baraskar, Dr. V. S. Joshi, M. P. Nagarkar, "Performance Evaluation and Optimization of Tie Rod in Suspension System of Car for a Buckling Study using Theoretical and Experimental Approach", International Journal for Scientific Research & Development| Vol. 3, Issue 11, 2016 | ISSN (online): 2321-0613.

[9] OwunnaIkechukwu, IkpeAniekan, P. O. Ebunilo&EmemobongIkpe, "Investigation of a Vehicle Tie Rod Failure In Relation To the Forces Acting On the Suspension System", American Journal of Engineering Research,e-ISSN: 2320-0847 p-ISSN, 2320-0936 Volume-5, Issue-6, 208-217.

[10] Valério S. Almeida a, Hélio Luiz Simonetti b "Luttgardes Oliveira Neto Comparative analysis of strut-and-tie models using Smooth Evolutionary Structural Optimization" Engineering Structures 56 (2013) 1665–1675

[11] M. Amabili, S.Carra, L.Collini , R.Garziera , A.Panno, "Estimation of tensile force in tie-rod susinga frequency-based identification method" Journal of Sound and Vibration 329 (2010) 2057–2067

[12] Zhihua Chen , Jie Lu, Hongbo Liu, Xiangwei Liao "Experimental study on the post-fire mechanical properties of high-strength steel tie rods" Journal of Constructional Steel Research 121 (2016) 311–329

[13] Raghavendra K, Ravi K, "Buckling Analysis of Tractor Tie Rod Subjected To Compressive Load", International Journal of Mechanical and Industrial Technology, ISSN 2348-7593, Vol. 2, Issue 1, pp: (125-129), Month: April 2014 - September 2014.

[14] Manik A. Patil, Prof. D.S.Chavan, Prof.M.V.Kavade, Umesh S. Ghorpade, "FEA of Tie Rod of Steering System of Car",International Journal of Application or Innovation in Engineering & Management, Volume 2, Issue 5, May 2013, ISSN 2319 - 4847.