Analysis of Different EEG Data Sets Extracted From Brain Using ICA

[1]Prof. Pavan Kumar E, [2]Usha B H, [3]Swati Uday Kenikar, [4]Suhaas R, [5]Ajay Chandra A S

Electronics and Communication Engineering,
Sai Vidya Institute of Technology, Bengaluru, India

***Abstract*— The human brain is the central organ of the nervous system, which consists of trillions of neurons. These control the basic functions of human body such as motor controls, sensory, regulations, emotions and languages. Brain waves are produced by synchronizing electrical pulses from neurons communicating with each other. Brain waves speed is measured in Hz and divided as delta, Theta, alpha, beta and gamma. Study of brain signals is known as electroencephalography (EEG).EEG helps to acquire brain signals from scalp area. EEGLAB is an interactive MATLAB toolbox which processes events related to EEG data continuously using independent component analysis (ICA).ICA is a technique of signal processing which separates multi-variant into additive sub-components.**

***IndexTerms*— Electroencephalography (EEG), Independent Component Analysis (ICA)**

I. INTRODUCTION

The human brain is a complicated system which includes central nervous system (CNS) and peripheral nervous system. There are various technologies to record the brain wave and electroencephalography is one of the efficient technologies. This brain signal processing technique help to record the brain's spontaneous electrical activity, as the Signal extracted from electrode placed on the scalp. There electrical signals will control inner mechanisms of the brain which used to diagnose brain disorders.

Electroencephalogram is a pictorial technique used for studying the functional state of the brain. In this multiple electrode are placed according to the 10-20 system over the scalp EEG computes voltage deviation resulting from ionic current present in the neurons of the brain. EEG recording normally not only contain electrical signal further which will be subtracted by differential amplifier. Generally EEG is used to identify electrical problem in the electrical activity of the brain which are associated with certain disorders. The recorded activity that is not of cerebral origin is termed as artifacts. The systematic approach of recognition and elimination of artifacts is an internal working of the brain. In this project we focus on eliminating such artifacts from recorded EEG data using Independent Component Analysis (ICA). ICA is an extended version for performing source separation.

TYPES OF ARTIFACTS-

Acute contamination of EEG activity by artifacts such as eye movements, heart signals, blinks, muscle noise and line noise produce a problem for proper EEG interpretation and analysis. The three types of muscle artifacts we study in this project are,

1 Eye Artifacts- they project mostly to the frontal side.
2 Rear Head Artifacts- they project mostly to the occipital side.
3 Muscle Artifacts- will disperse throughout the brain.

.

II. HARDWARE DESCRIPTION

The electrodes used in the above block diagram are Ag/AgCl, the three same types of electrodes are used out of which two are placed at either side of forehead and the other one is placed as a reference behind the ear of the subject. The brain signals are given to the low pass filter i.e., RC circuit because it allows the frequency between 0Hz -300Hz which consists of beta signals (15Hz - 30Hz) that is received from the brain. This signal is given to the voltage follower circuit and the same signal is given to the instrumentation amplifier which helps to improve the gain of the signal using an IC LM324. This amplified signal is given to the second order low pass filter in order to get a particular frequency of a signal. This signal is fed to the high pass filter which will remove the low frequency signals which is less than 15 Hz. The output obtained from the high pass filter is analog; in order to convert this signal to digital we use ADC. The digital signals obtained will be optimized using MATLAB. Later signal processing is done through ICA technique.

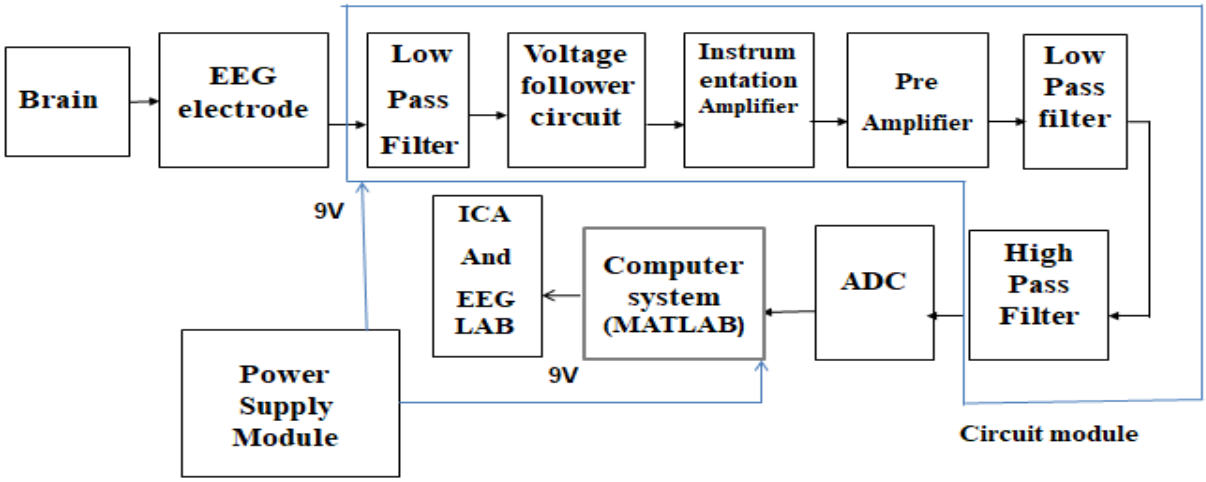

Fig 1: Block diagram of proposed system

EEG Electrode Brain Waves

The electrical signals which are emitted from the brain were displayed in the form of brainwaves. There are five categories of these brains namely delta (up to 4Hz), theta (ranges from 4Hz to 7Hz), alpha(range from 7Hz to 14Hz),beta(range from 15Hz to 30Hz), gamma(range approximately 30Hz to 100Hz).In our project we were mainly concentrating on beta waves. The amplitude the brain signals generated from brain cells will be in the range of1-100μwaves [1].

Ag/AgCl Electrode

The brain signal from the brain was extracted from the EEG electrodes. Ag/AgCl electrodes are impregnated with an electrolyte gel which helps in the transduction of the ionic currents, that freely move through brain tissues and the cerebrospinal fluid, into electric currents and is necessary to measure the electrode-skin impedance to guarantee a low value typically 5-20kΩ.

AMPLIFIER DESIGN

FIRST ORDER LPF - A low pass filter is designed in order to confirm the required frequency range to be allowed for the further signal processing. The frequency we designed will ranges from 0 to 28.218 kHz. It mainly contains an individual pass band and stop band. Here the design is carried out to attenuate the frequency of above 28.128Hz and remaining frequencies are allowed to pass.

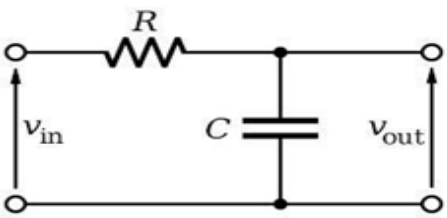

Fig 2: First order low pass filter

VOLTAGE FOLLOWER- A voltage follower is chosen to reduce input impedance of op-amp obtained from the electrode F1, F2, F3.It can handle the input voltage up to 12v and input bias current of 80nA. It has a special feature of overload protection on output and input. It plays a circuit role in acquisition of brain signals and provides a good isolation from output to input source.

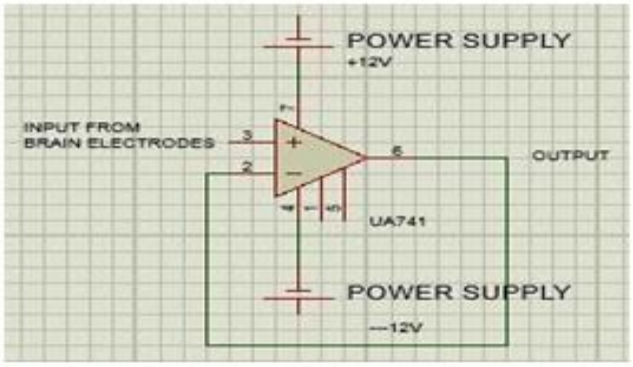

Fig 3: Schematic of voltage follower

INSTRUMENTATION AMPLIFIER- It mainly measures the voltage difference between two locations on the scalp of the head. The purpose of this circuit is common mode rejection is to be reduced between the common mode signals such as 50Hz interferences[2].It has features as high open loop gain, high impedance and CMRR. Two op-amps in the same pitch have identical characteristics. Some degradation of CMRR due to component mismatch could be avoided. The differential amplification stage is fulfilled by the packed instrumentation amplifier i.e. high open-loop gain, high impedance and high CMRR, the gain is programmed accurately with a single resistor as $G=1+50k/R_g$ where R_g is adjusted between 1KΩ to 10KΩ ,so that gain of the input stage could be modulated from 246 to 2050.

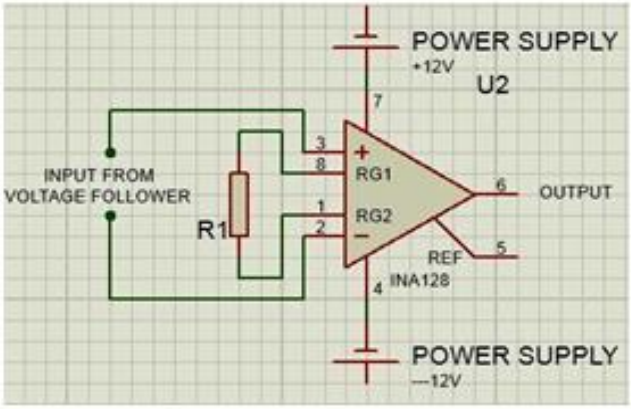

Fig 4: Schematic of instrumentation amplifier

SECOND ORDER LPF- It is designed to attenuate the frequencies above 15.91Hz and allow the pass band of 0.19 0-15.91Hz.The LPF is designed by making the op-omp to work in non-inverting configuration mode and gain is generally greater than unity.

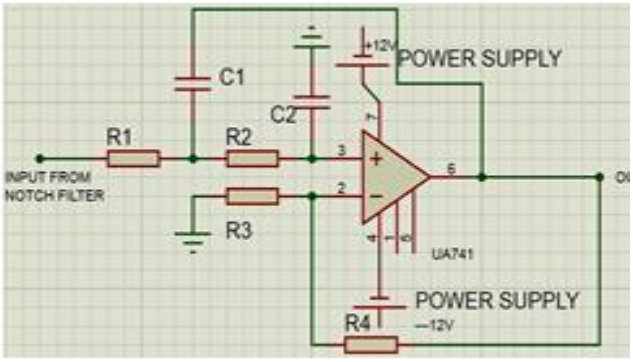

Fig 5: Schematic of second order low pass filter design.

III. SOFTWARE DESCRIPTION

MATLAB

The Project is running under the platform of MATLAB environment and it has the ability to process biophysical data by different way such as using simplicity of its command line languages or using languages or using the many MATLAB functions and methodology related to the analysis of the brain signal processing through MATLAB software toolbox.

EEGLAB

It is an interactive MATLAB toolbox for continuous signal processing. Event related EEG and other electrophysiological data using ICA and other methods including artifact rejection. It provides an interactive graphic user interface (GUI) allowing user flexible and interactively processes their EEG and other dynamic brain data using independent component analysis(IC) as well as standard averaging methods. It offers a structured programming environment for storing, accessing, measuring, manipulating and visualizing event related EEG data. EEGLAB Plug-in functions might be created and released to perform import/export plotting and inverse source modeling for the data.

ICA

Decomposing the processed data by ICA in walls a linear change of basis from data collected at single scalp channel to spatially transformed "virtual channel" basis instead of collection simultaneously recorded single channel data records ,the data are transformed collection simultaneously output of filters to the whole multi-channel. These filters may be designed for many purposes in many ways.

IV. ANALYZING DATA IN EEGLAB

This section introduces how to load, view EEG and associated event data. Initially sample EEGLAB datasets are loaded. Type, latency and position are the fields recognized by EEGLAB and these fields able to handle events approximately to extract epochs, plot reaction times etc. Before studying their power spectra and associated topographical maps. It includes color trace which represents the spectrum of the activity of one data channel.

Data pre-processing tools are available in EEGLAB menu. These tools comprise changing the data sampling rate, filtering data and refreshing the data. Analyzing data in EEGLAB also comprise [functions like] plotting an ERP's, finding ERP peak latencies, plotting ERP images with spectral option etc. Decomposition of data is done by TCA where the independent component filters are chosen to produce the maximally temporally independent signal available in the channel data.

STUDYING AND REMOVING ICA COMPONENTS

Here we study the component properties and label components for rejection.

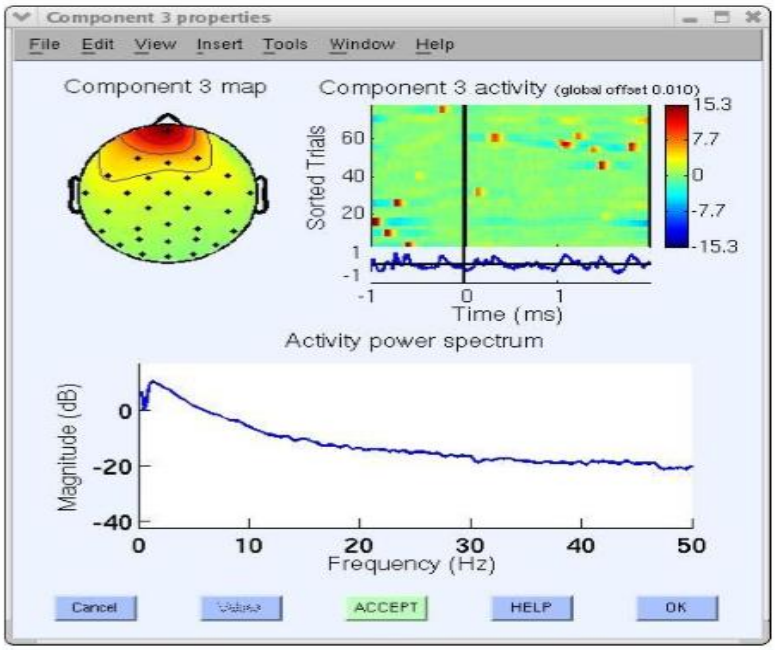

Fig 6: Component properties of eye artifacts

The above figure represent component property which are accessed by selecting plot>component properties. It looks like components by their scalp topographic and position in the component array. It accounts like eye artifacts which are always present in EEG datasets. Since this component accounts for eye activity we remove it from data before analysis and plotting.

WORKING WITH ICA COMPONENT

This section involves rejecting data epochs using ICA and plotting component spectra and maps. ICA considers too much type of artifacts which will have unique data features. These produces set of component maps including many single-channel or noisy appearing components. The number of components devoted to decomposition is reduced. Hence clear EEG data is the best strategy. Later component spectra and maps are plotted which will (helps us to) estimate the decrease in power in comparison to the original signal at one channel.

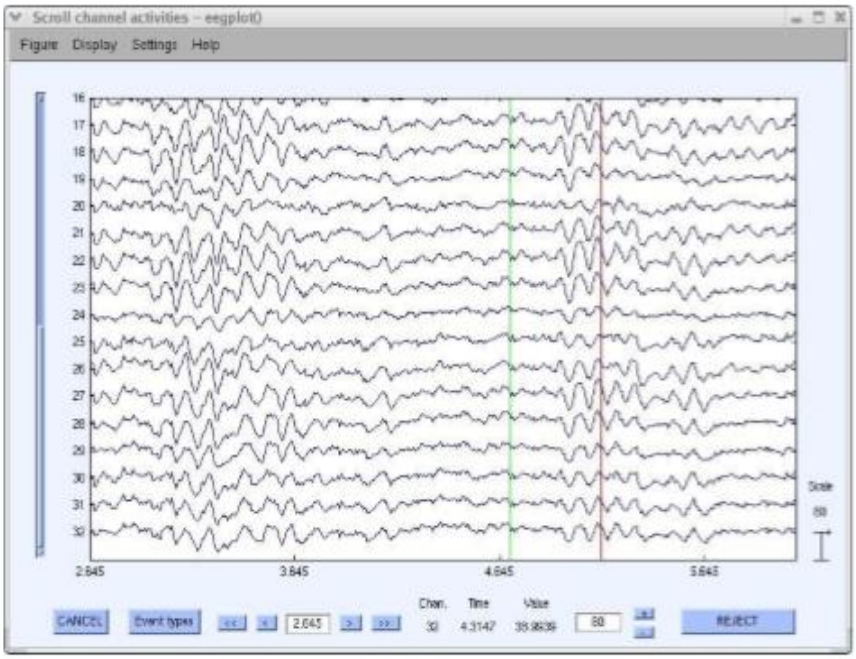

Fig 7: Scroll channel activities of eegplot

V. VALIDATIONS

ICA is performed on these epochs to derive their independent components and these independent components concentrate on artifacts, where bad epochs can be easily detected using independent component activities. It visually inspects and selects data epochs for rejection.

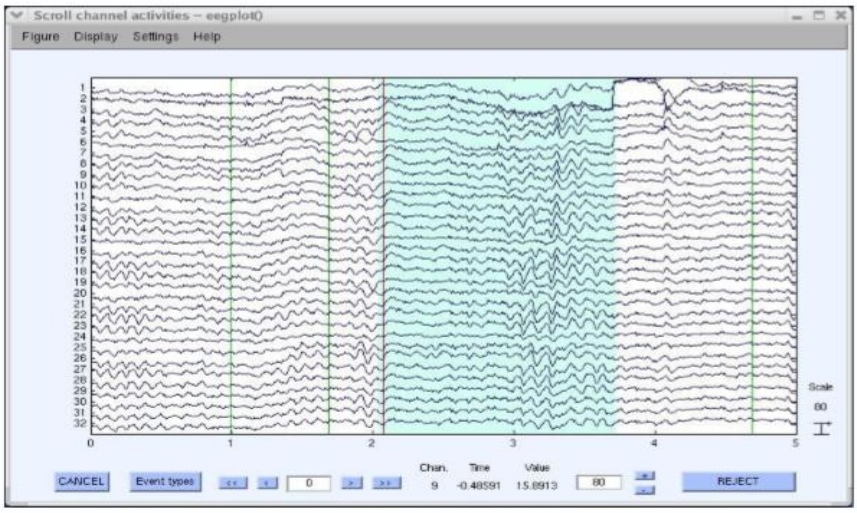

Fig 8: Rejection of selected artifacts

VI. RESULT

The trial lines which are above the threshold are marked for rejection. All channels of the same trial can be exceeding the threshold. So it can be updated in the pop-up window. "SCROLL DATA"may be used to manually adjust the list of epochs marked for rejection. In the figure the single channel limit is set to 5 in the main rejection window.

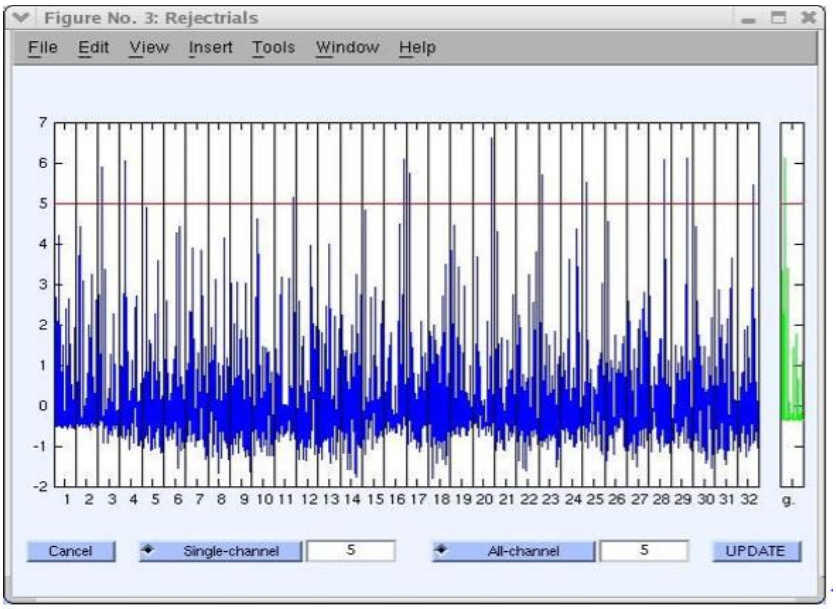

Fig 9: Epochs marked for rejection

The QQ- plot helps us to determine whether the data sample is drawn from a Normal Distribution. If the data sample do come from a Normal Distribution (same as the shape), even if the distribution is shifted and rescaled from the standard Normal Distribution (different location and different scale parameters), the plot will be linear.

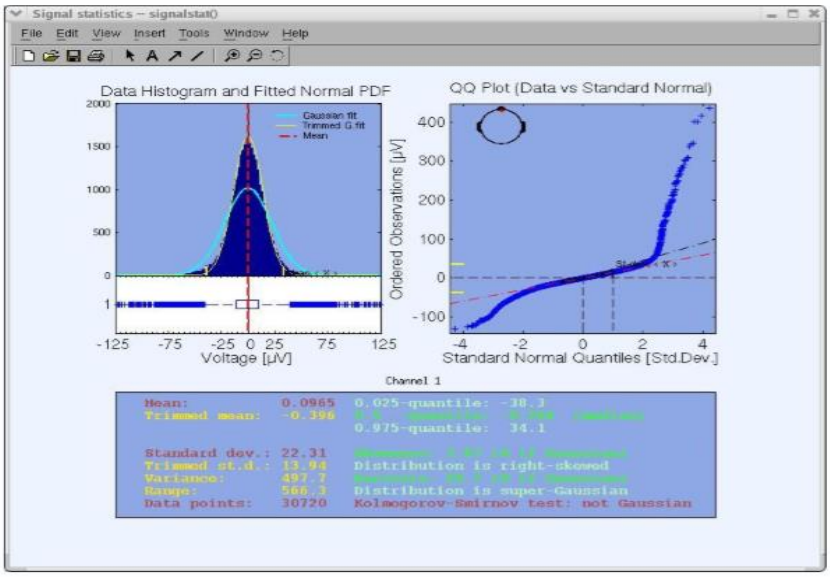

Fig10: Data histogram and QQ-Plot

VII. CONCLUSION

As we know that EEG is a test used to evaluate the electrical activity in the brain, this electrical activity appears as a pattern of waves. So different level of consciousness can be specified in the range of frequency are examined as normal. Abnormal results may be due to the brain disorders. Hence human EEG data's are compared and analyzed using the signaling technique called ICA and artifacts are removed, where high noise which is associated with raw EEG signals are reduced / eliminated.

VIII. ACKNOWLEDGEMENT

We would like to show our gratitude to TMI Systems for sharing theirs pearls of wisdom with us during the course of this research and helping us in designing the circuit.

REFERENCES

[1] Hass LF.Hans Berger (1873-1941), Richard Caton(1842-1926), and EEG. Journal of Neurology Neurosurgery and Psychiatry 2003 Jan; 74(1):9.

[2] Lei Zhang, Xiao-Jing Guo,Xiao-Pei Wu, Bing-Yan Zhou, low cost circuit design of EEG signal acquisition for the brain –computer interface system.

[3] Xian- JiePu, Tie – Jun Liu, and De –Zhang Yao , Design of an EEG Preamplifier for BCJ ,March 2009 , vol 7, No. 1

[4] PAVAN KUMAR.E, DIVYASHREE "A Novel Design and Implementation of EEG Acquisition System Using Android Software".IJAIM-2015

[5] PAVAN KUMAR.E, DIVYASHREE "SSVEP EEG signal with pattern recognition technique to control roboarm", ISSN 2348-117X, Volume 3,Issue 4, June 2014.

[6] Anthony J Bell & Terrance J Sejnowski, An information-Maximisation approach to blind separation and blind de-convolution, Neural Computation, 7,6, 1004-1034 (1995)

[7] Jean-Francois Cardoso Blind Signal Separation: Statistical principles Proceedings of the IEEE, vol 9, no 10. p 2009-2025 Oct 1998.

[8] Scott Makeig, Independent Component analysis of Electroencephalographic Data Advances in Neural Information Processing Systems 8''. MIT Press, Cambridge MA 1996.

[9] Sachin Sharma, Gaurav Kumar, Dipakkumar Mishra, DebasisMohapatra." Design and Implementation Of A Variable Gain Amplifier For Biomedical Signal Acquisition". Volume 2, Issue 2, February 2012 ISSN: 2277 128X. Lew counts, Charles kitchin.

[10] American Psychiatric Association Diagnostic and Statistical Manual of Mental Disorders, 4THed, text revision (DSM-IV-TR) 2000.ISBN 0890420254.Diagnostic criteria for 299.80 Aspergers's Disorder (AD).

[11] Piven J, Plamer P, Jacobi D, Childress D, Arndt S. Broader autism phenotype: evidence from a family history study of multiple-incidence autism families [PDF].

[12] Technical computing using Sybase database for biomedical signal analysis J. Krupa, A Prochazka, V Hanta, R Hava.