Understanding the Need for GFDM as a Spectrum for Next Generation Communication (5th Generation)

[1]Khyati Ghai, [2]Prof. Sandeep Bhad

[1]M-Tech Scholar, [2]Assistant Professor
[1]Department of Digital Electronics
[2]Department of Electronics & Telecommunications
Rungta College of Engineering and Technology, Kohka Road Kurud *Bhilai (C.G)*

***Abstract*: This paper is based on the analysis in between the basic performance parameters for 5G. We are aware that LTE started with Orthogonal Frequency Division Multiplexing (OFDM). 5G cell frameworks convey high information rates, ultralow control utilization, and low end-to-end dormancy. At present, there is significant enthusiasm for the outline and execution of new 5G physical layer waveforms. Generalized Frequency Division Multiplexing (GFDM) waveforms are required to help a smooth progress from existing 4G arrangements. In this paper, the execution of a GFDM waveform is noted down with regards to LTE - In utilizing channel demonstration & also understanding the fact that makes GFDM a better candidate for [1] 5G. The Results are specifically contrasted and conventional with respect to OFDM arrangements. It is notable that at a certain stage the "Orthogonality" breaks & there comes the need for a better spectrum whose best candidate can be GFDM**

***Keywords:* GFDM, OFDM, Orthogonality**

1. INTRODUCTION

Orthogonal Frequency Division Multiplexing (OFDM) is a technique for transmitting large amounts of digital data over a radio wave The technology works by splitting the radio signal into multiple smaller sub-signals that are then transmitted simultaneously at different frequencies to the receiver. 5G framework prerequisites keep on changing & are contingent upon the situation, for example, Machine Type Communications (MTC), Internet of Things (IoT) and versatile communications. Time domain orthogonality and frequency domain orthogonality are two important aspects, in ofdm if we check for frequency domain the fourier transform of pulse is sinc function, so there will be lot of side lobes, and if there is any problem in terms of synchronization , suppose if you take any sampling then you may be ending at sampling at side lobe, this leads to leakage energy, this leads to ICI, mostly occur in W dispersive channel, where you have both time dispersion and time variation takes place, , time variation leads to doopler shift, there is guard band between each and every symbol this is again loss of spectral efficiency, Advantage is Equalization because of H matrix and it can be decomposed into Eigen matrix.

PAPR is very high in OFDM so the two alternatives that we have are GFDM & OQAM.
GFDM has many advantages here the pulse is no more rectangle, pulse duration in ofdm is 0 toT, but in GFDM the pulse duration is not 0 to T. we use long duration pulse in GFDM We have to long pulse , the frequency domain is flat. COMBINATION of subcarriers and sub symbol make one symbol in GFDM.
we have to consider a time vs. frequency grid, to analyze the subcarriers

The GFDM architecture is varied & different. It is more efficient if we code in simple words. The presented GFDM scheme defines transceiver architecture and a PHY concept, allowing to opportunistically exploiting spectrum white spaces for wireless data communications

GFDM ARCHITECTURE

Cell systems of the fifth generation (5G) confront distinctive application prerequisites, and need to give a significantly higher information rate. Orthogonal Frequency Division Multiplexing (OFDM) isn't an appropriate waveform for future systems. So as we can see that the GFDM Architecture is least fragile [2]. Generalized Frequency Division Multiplexing (GFDM), is a summed up multicarrier transmission plot [3]. It is viewed as a promising waveform for the 5G systems on account of its adaptability in tending to a wide assortment of prerequisites [2].

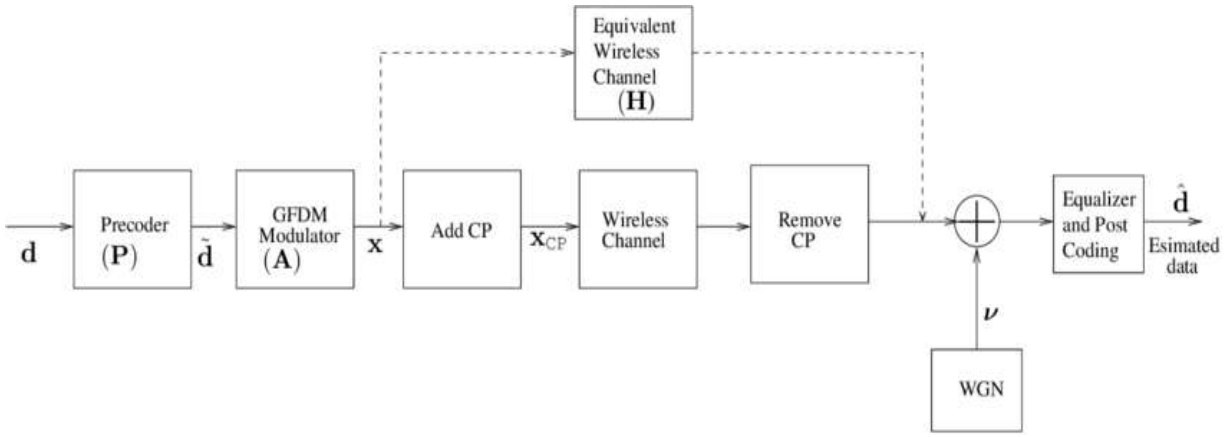

FIGURE-1 (Precoded GFDM System to Combat Inter Carrier Interference: Performance Analysis - Scientific Figure on ResearchGate)

To execute the framework level work, bit level test systems for the two waveforms (OFDM and GFDM) have been produced and used to ascertain the PER for every client for 9 MCS modes. One thousand channel previews were delivered for each connection (between every UE and its serving BS and every UE and every single one of six first-level meddling BS) to create measurably applicable execution information. At present, there is significant amount of work for the outline and execution of new 5G physical layer. In waveforms is done. One of the major hopes in this area is from Generalized Frequency Division Multiplexing (GFDM). 5G waveforms are required to help a smooth progress from existing 4G arrangements. A Comparative study of Bands of Both the Spectrums are telling us that the basic purpose of GFDM is to abstract up the fact that lower out of band radiations can be generated.

2. METHODOLOGY

PAPR is very high in OFDM so this becomes the point to make notable conclusions regarding Error Rate. The basic task is to have high channel utilization rates. [1] To analyze this we need to study the bit error rate (BER) per sequence. **Bit Error Rate, (BER)** is a key parameter that is utilized as a part of evaluating that transmit computerized information starting with one area then onto the next. For GFDM this calculation will showcase the error performance index. Communication Channels for which bit error rate, (BER) is pertinent incorporate radio information interfaces and also fiber optic information [9] to the channels, Ethernet, or any other framework that transmits information over a system of some shape.

In spite of the fact that there are a few contrasts in the way these frameworks work and the route in which bit mistake rate is influenced, the nuts and bolts of bit blunder rate itself are as yet the same. At the point when information is transmitted over information connect; there is a plausibility of mistakes being brought into the framework. On the off chance that errors are brought into the information, at that point the respectability of the framework might be bargained. Subsequently, it is important to survey the execution of the framework, and bit error rate, BER in which gives a perfect pathway in which this can be accomplished. Despite various other factors, BER evaluates the full end to end execution of a communication including the transmitter, beneficiary and the medium between the two. Most Importantly BER empowers the genuine execution of a communication channel.

2.1 COMPARISON BETWEEN GFDM & OFDM

A. Spectrum Analysis

Multicarrier modulation techniques are particularly beneficial because when the data rates increase, so wider bandwidths are needed. When this happens, different frequencies within the bandwidth are subject to different path lengths and different fading conditions. This can distort the transmission making it difficult to copy. MCM provides a way of increasing the bandwidth whilst still being able to tolerate the varying fading conditions present. The advantage of multicarrier systems is that they are less susceptible to interference than single carrier system as interference may only affect a small number of the carriers.

Two alternatives are there to overcome this OFDM orthogonality or pulse structure that becomes a barrier for 5G. GFDM has many advantages here the pulse is no more rectangle, pulse duration in ofdm is secondary (0 to T) but in GFDM the pulse duration is not 0 to T. we use long duration pulse in GFDM we have to long pulse , the frequency domain is flat. COMBINATION of subcarriers and sub symbol make one symbol in GFDM. We have to consider a time vs. frequency grid, to analyze the subcarriers with respect to keeping in context with the disadvantages of OFDM.

DISADVANTAGES OF OFDM:

- The OFDM signal has a noise like amplitude with a very large dynamic range; therefore it requires RF power amplifiers with a high peak to average power ratio.
- It is more sensitive to carrier frequency offset and drift than single carrier systems are due to leakage of the DFT.

Below there is a graphical interpretation of how the OFDM loses the necessary traits that are required for 5th Generation Communication Systems.

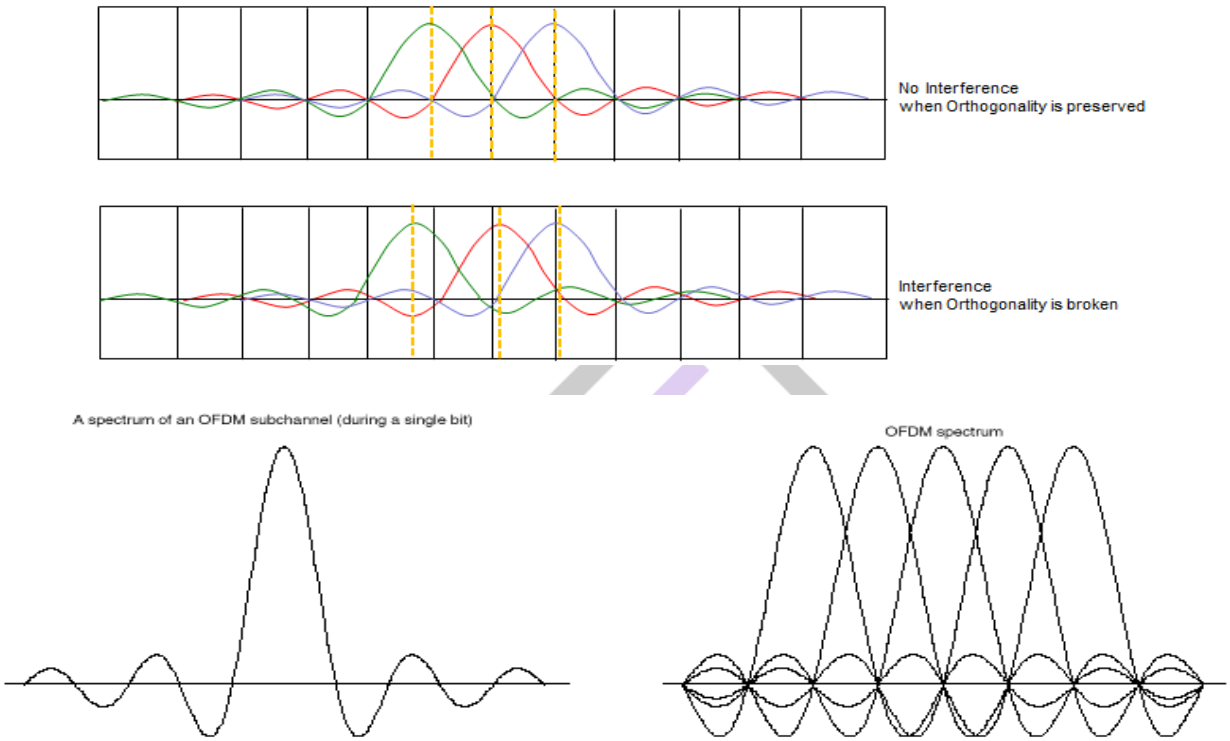

FIGURE – 2
OFDM SUBCARRIER & DEMONSTRATION FOR NEED OF GFDM

B. Minimum Mean Square Error Receiver (In General for both OFDM & GFDM)

A major drawback of the zero forcing receivers is its inherent property of potential noise amplification, which states:

- That the minimum mean square error is with regards to bits & traces.
- GFDM is one of the strong candidates for use in future 5G systems as its applications are based on dynamic spectrum access. OFDM does not qualify here.
- The Minimum Mean Square Error is always linearly independent.
- This reduces noise to maximum levels.

2.2 PACKET ERROR RATE (PER).

The capacity of Handset needs to be boosted for this the study of PER is important. Relative study demonstrates that the (PER) of OFDM & GFDM are almost same.

So as the basic review tells us that PER for GFDM is almost same. PER values are also inclined throughout the throughput of the abstraction value. Let us consider these values to be in the multiple powers of 10. To find the derivative values. We can consider the values to be as basic as in case of alpha being considered.

Generalized frequency division multiplexing (GFDM) which can be considered to a greater extends as a generalization [11] of OFDM. GFDM is an enthralling choice for low-latency applications like internet of things and MTC. With proper management of ICI which occurs inherently due to the non-orthogonal nature of the subcarriers and low complex receiver designs, GFDM is a potential candidate for future wireless needs.

Some of the Outputs with respect to Error Performance will be more of the analysis in terms of PER values & SER Guard

band insertion. GFDM uses CP between two frames whereas OFDM uses CP [7] between two time slots. In GFDM, interference between time slots can be taken care of by the appropriate choice of pulse shape filter and hence CP is inserted between two GFDM frames. This effectively reduces spectrum utilization. Additionally, due to the block-based underlying structure, GFDM is an enthralling choice for low-latency Multicarrier modulation & is the need of hour. Among all the 5G candidates, when it comes to error performance lower out-of-band radiation (better spectral efficiency) higher robustness against carrier frequency offset (CFO) higher robustness against sampling time offset. So the methods involved will be for arbitrary numerous entrance correspondence over the discrete-time memory-less channel.

The coding approach enables clients to pick their correspondence rates freely without sharing the rate data among each other or with the beneficiary. The recipient (singnal) will either interpret the message or report a crash contingent upon whether solid message recuperation is conceivable. It was demonstrated that, asymptotically as the channel length goes to boundlessness, the arrangement of correspondence rates supporting solid messages of state of frequency in generalized state can be portrayed by an achievable area which squares with Shannon's data rate district potentially without a raised frame operation. In this paper, we determine achievable limits on blunder probabilities, including the unraveling mistake likelihood and the impact miss discovery likelihood, of arbitrary numerous entrance channels with a limited codeword length. Achievable error types are acquired by taking the code or channel length to vastness.

What we get to know out here is the fact that GFDM is all about adjacent multiple carrier outputs & the forms are acquired by subcarriers. GFDM is also motivated by the fact that in Long-term evolution (LTE) mobile communications, users are allocated so-called physical resource blocks (PRB). PRBs consist of a set of adjacent subcarriers and symbols. These all traits are not present in OFDM.

3. RESULT AND FUTURE SCOPE

GFDM is the most suitable multicarrier scheme & no doubt that for all the future communication systems the most needed requirements is a channel that is efficient. So the curved based spectrum that is OFDM has orthogonality breakdown that's the point where GFDM comes into seen.Today the cell framework requests higher information rates, low-inertness transmissions and sensors with ultra low-control utilization. Current cell frameworks of the fourth era (4G) are not ready to meet these developing requests of future versatile correspondence channels. To address this necessity, GFDM, a novel multi-bearer tweak system is proposed to fulfill the future needs of fifth era innovation. GFDM is a square based transmission strategy where beat molding is connected circularly to singular subcarriers. Dissimilar to customary orthogonal recurrence division multiplexing, GFDM transmits various images per subcarrier.

REFERENCES

[1] G. Fettweis and S. Alamouti, "5G: Personal Mobile Internet Beyond What Cellular Did to Telephony," *IEEE Communications Magazine*,vol. 52, no. 2, pp. 140–145, Feb. 2014.

[2] G. Wunder, P. Jung, M. Kasparick, T. Wild, F. Schaich, Y. Chen,S. Brink, I. Gaspar, N. Michailow, A. Festag, L. Mendes, N. Cassiau,D. Ktenas, M. Dryjanski, S. Pietrzyk, B. Eged, P. Vago, and F. Wiedmann General Paper

[3] Y. Ding, Y. Jin, L. Ren, and KR. Habendorf, R. Irmer, W. Rave and G. Fettweis. Nonlinear Multiuser Precoding for non-connected Decision Regions Proc. 6th Workshop Signal Process. Adv. Wireless Commun, Jun. 2005, New York City, USA.

[4] J. Zyren and W. McCoy.Overview of the 3GPP Long Term Evolution Physical Layer, Online available, July 2007.

[5] Journal of Electronics, Communication & Soft Computing Science and Engineering Rajesh C.Patil, Dr. A. S. Bhalchandra ISSN: 2277-9477, Volume2, Issue no. 1

[6] N. Michailow, M. Matthe, I. S. Gaspar, A. N. Caldevilla, L. L. Mendes, A. Festag, *et al.*, "Generalized Frequency Division Multiplexing for 5th Generation Cellular Networks," *Communications, IEEE Transactions on*, vol. 62, pp. 3045-3061, 2014.

[7] L. L. Hanzo, Y. Akhtman, L. Wang, and M. Jiang, MIMO-OFDM for LTE, WiFi and WiMAX: Coherent versus Non-coherent and Cooperative Turbo Transceivers vol. 26: John Wiley & Sons, 2011.

[8] Precoded GFDM System to Combat Inter Carrier Interference : Performance Analysis - Scientific Figure on ResearchGate. Available from: https://www.researchgate.net/Transmitter-and-receiver-architecture-for-Precoding-based-GFDM-system (for figures)

[9] N. Michailow, I. Gaspar, S. Krone, M. Lentmaier, and G. Fettweis, "Generalized frequency division multiplexing: Analysis of an alternative multi-carrier technique for next generation cellular systems," in Wireless Communication Systems (ISWCS), 2012 International Symposium 2012, pp. 171-175.

[10] V. Vakilian, T. Wild, F. Schaich, S. t. Brink, and J. F. Frigon, "Universal-filtered multi-carrier technique for wireless systems beyond LTE," in 2013 IEEE Globecom Workshops (GC Wisps), 2013, pp. 223-228.

[11] R. Ayadi, M. Siala, and I. Kammoun, "Transmit/receive pulse- shaping design in BFDM systems over time-frequency dispersive AWGN channel," in Signal Processing and Communications, 2007. ICSPC 2007. IEEE International Conference on, 2007, pp. 772-775.

[12] PHY based on generalized frequency division multiplexing," in Wireless Communications Systems (ISWCS), 2014 11th International Symposium on, 2014, pp. 209- 213.