Smart Shoes Energy Harvesting System

[1]Akshay R. Gosavi, [2]Ajinkya V. Gothane, [3]Prof. Priyanka Raut

Department of Electrical Engineering
DES'sCOET Amravati, Maharastra ,India

***Abstract*: The Energy Harvesting is to capture free energy, available without costs, from the environment. The development of advanced techniques allowed to capture, to store and to manage amounts of natural energy, transforming them into electrical energy. Moreover, advancements in microprocessor technology have increased power efficiency, effectively reducing power consumption requirements. From the point of view of wearable electronics devices, the most efficient energy harvesting system for energy capturing is that to use devices inserted into the shoes. These devices are situated into the soles where, during the movement, a force is exerted. Using piezoelectric elements and electromagnetic induction systems, this force allows recovering a high quantity of electrical energy useful for sensor supply and complex monitoring systems. In this seminar, four different solutions of smart shoes that use Energy Harvesting systems are presented, with the aim to recover energy to supply a GPS device. Preliminary comparative results of 4 different solutions are compared on the bases of costs, production feasibility and energy harvesting capabilities.**

***Keywords*: Electronic Devices, Energy Harvesting, GPS Localization, Piezoelectric Elements, Smart Shoes.**

INTRODUCTION -In the last years, there is increment in energy recovery system, and the continuous advancement due to which able to capture and to translate different type of energy into electrical form, a high number of wearable electronic devices has been introduced and developed. They have been used for monitoring human activity, and they allowed not only to examine the state of body and the health of persons, but also to recover much information concerning different fields of application human motion geo localization security and many others.

A better solution is to generate power where it is being used, overcoming, in this way, the problem of storage and distribution. In many attempts have been made in this direction, considering different technologies that go from the construction of electromechanical generators to surgically positioning of piezoelectric material in the animals.

About wearable electronics devices, one of the most efficient systems for energy capturing are those that use energy harvesting systems inserted into the shoes. These systems are installed into the soles where, during the walking and the running, the force is exerted. Using piezoelectric elements and electromagnetic induction systems, this force allows recovering a high quantity of electrical energy useful for sensor supply and complex monitoring systems. For that, it is necessary to analyze in detail the pressure distribution along the sole of the shoes during the walking and the running, in order to optimize the positioning of the elements useful for the energy recovering.

In this paper is to present four different typologies of smart shoes able to recover sufficient energy to supply a geo localization system of a person. The following solutions are different concerning the energy harvesting systems used and for different positioning, inside the sole, of the elements designed for the energy recovering. Preliminary comparative results of 4 different solutions are compared on the bases of costs, production feasibility and energy harvesting capabilities.

Principle

A sheet of PVDF piezoelectric material has been positioned corresponding to the heel of the sole. The maximum stresses to which a sole has been subjected concern the walking phase. The upper part as a limit to the deformation of the piezoelectric sheet has been realized to anchor the piezoelectric material, basic design is as shown in fig. Inside the base of the device, a dedicated space for the installation of the GPS module and various electronic devices has been created. The upper part of the base holds the piezoelectric sheet, attached by two trapezoidal bars fixed on the base through captive screws which allow the material to move. The uses two energy recovery systems, one placed on the rear of the sole that uses four buzzer and the second placed on the front part that uses a film of PVDF piezoelectric material .This version is certainly the most expensive and elaborate, but is the most efficient during the device operation even in emergency situations. The total system of energy harvesting allows using the energy discharged from the foot in both areas, optimizing the energy recovery process. The GPS system has been positioned in the central part of the sole, where the foot downloads less weight. In order s exploit this feature, the piezoelectric sheet must be kept folded and for this reason it has been fixed to a bracket of a harmonic material. A number of piezoelectric sheets have been merged (16 sheets: 8 above the steel strip and 8 below this last) in order to produce enough voltage to supply the GPS device. Two different systems of Energy Harvesting have been used one positioned in the heel area and consist of 12 piezostack and the other in the forefoot areaachieved using a folded sheet of piezoelectric material. The piezostacks in the heel are placed inside a support realized through a 3D printer, which has as its main purpose to provide a rigid support base to piezostacks that otherwise would sink into the rubber of the sole dispersing large part of their deformation and thus the power generated. It was also realized an insole to provide a pressure support as uniform as possible also in the upper end of piezostacks and thus increasing the comfort of the whole system. The area of the forefoot, unlike that the heel, has a thickness available for a very modest holding of the piezoelectric, making it impossible to use piezostacks as for the heel.

Fig. Design of System

Evaluation

The smart shoes energy harvesting system using piezoelectric material produce by amount of electricity.

Advantages & Disadvantages

Advantages

i) The piezoelectric transducer is available in desired shape.
ii) It has rugged construction.
iii) It has small in size.
iv) It has good frequency response.
v) It has negligible phase shift.

Disadvantages

i) The piezoelectric transducer is used for dynamic measurement only.
ii) It has high temperature sensitivity.

Applications

i) The piezoelectric transducer is used in spark ignition engines.
ii) It is used in accelerometer.
iii) It can be used electronic watches.
iv) It is used in record player.

Future Scope

Four different types of soles with energy harvesting systems for supplying a GPS module have been proposed. On the basis of the walking cycle and the study of the distribution of the pressure exerted by the foot on the shoe through the analysis, the zones of the sole where to position the elements of energy harvesting in order to maximize their effectiveness have been identified. Energy recovery was achieved using piezoelectric material, buzzer and piezostacks inserted into the sole. All the elements have been integrated into the shoe creating also supports allowing the anchoring of energy harvesting devices and the integration of electronic components needed for geo localization. This work is in a preliminary phase, since there is only a description and comparison of performance of the systems without a strong experimental phase. In order to evaluate the ability of the systems in the energy recovering, it is necessary to compare performances making two different tests. The first in laboratory making use of a machine for fatigue tests and performing measurements in open and closed circuit. The second test in a real application (on the road) wearing for a few days the finished prototype of the shoes in order to evaluate the energy recovered during a daily use of the shoes, the actual wear ability and the comfort level.

Fundamental of Piezoelectricity

A piezoelectric substance is one that produces an electric charge when a mechanical stress is applied (the substance is squeezed or stretched). Conversely, a mechanical deformation (the substance shrinks or expands) is produced when an electric field is applied. This effect is formed in crystals that have no centre of symmetry. In order to produce the piezoelectric effect, the polycrystalline is heated under the application of a strong electric field. The heat allows the molecules to move more freely and the electric field forces all of the dipoles in the crystal to line up and face in nearly the same direction.

Equivalent Circuit of Piezoelectric Harvester

An input vibration applied on to a piezoelectric material as shown in fig. 3.2 causes mechanical strain to develop in the device which is converted to electrical charge. Leadzirconate-titanate (PZT) is a commonly used piezoelectric material for power generation. The equivalent circuit of the piezoelectric harvester can be represented as a mechanical spring mass system coupled to an electrical domain as shown in fig. 3.2 Here, L_M represents the mechanical mass, C_M the mechanical stiffness and R_M takes into account the mechanical losses. The mechanical domain is coupled to the electrical domain through a transformer that converts strain

to current. On the electrical side, Cp represents the plate capacitance of the piezoelectric material. At or close to resonance, the whole circuit can be transformed to the electrical domain, where the piezoelectric element when excited by sinusoidal vibrations can be modeled as a sinusoidal current source in parallel with a capacitance Cp and resistance Rp. One of the challenges in a power generator of this type is the design and construction of an efficient power conversion circuit to harvest the energy from the PZT membrane. Another unique characteristic of this power source is that it outputs relatively low output voltages for the low levels of input vibration typically encountered in ambient conditions. This low output voltage makes it challenging to develop rectifier circuits that are efficient since many diode rectifiers require nonzero turn-on voltages to operate.

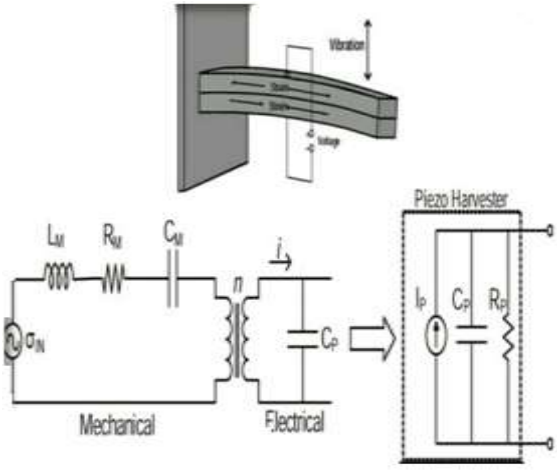

Fig. : Equivalent Circuit of Piezoelectric Harvester

Energy Harvesting Piezoelectric Circuit

A piezoelectric harvester is usually represented electrically as a current source in parallel with a capacitor and resistor. The current source provides current proportional to the input vibration amplitude. For the sake of the following analysis, the input vibrations are assumed to be sinusoidal in nature and hence the current is represented as,

$I_p = I_p \sin w_p t$,

Where,

$w_p = 2\pi f_p$ and f_q is the frequency with which the piezoelectric harvester is excited. The power output by the piezoelectric harvester is not in a form which is directly usable by load circuits such as micro-controllers, radios etc. which the harvester powers. The voltage and current output by the harvester needs to be conditioned and converted to a form usable by the load circuits. The power conditioning and converting circuits should also be able to extract the maximum power available out of the piezoelectric energy harvester. Commonly used analog and digital circuits require a regulated supply voltage to operate from. Since the piezoelectric harvester outputs a sinusoidal current, it first needs to be rectified before it can be used to power circuits. Use a circuit using full wave bridge rectifier. The capacitor Cr at the output of the rectifier is assumed to be large compared to Cp and hence holds the voltage at the output of the rectifier, $V_r$essentially constant on a cycle-to-cycle basis. The non-idealities of the diodes V_d is represented using a single parameter which is the voltage drop across the diode when current from the piezoelectric harvester flows through it. Every half-cycle of the input current waveform can be split into 2 regions. For the full-bridge rectifier, in the interval between t=t on to t=t off and, the piezoelectric current inflows into Cp to charge or discharge it. In this interval, all the diodes are reverse biased and no current flows into the output capacitor Cr. This condition continues till the voltage across the capacitor Cp is equal to $V_r + 2V_d$ in magnitude. When this happens, one set of diodes turn ON and the current starts flowing into the output. This interval lasts till the current ip changes direction. At low values of V_r, most of the charge available from the harvester flows into the output but the output voltage is l.

Fig. (b): Energy Harvesting Circuit

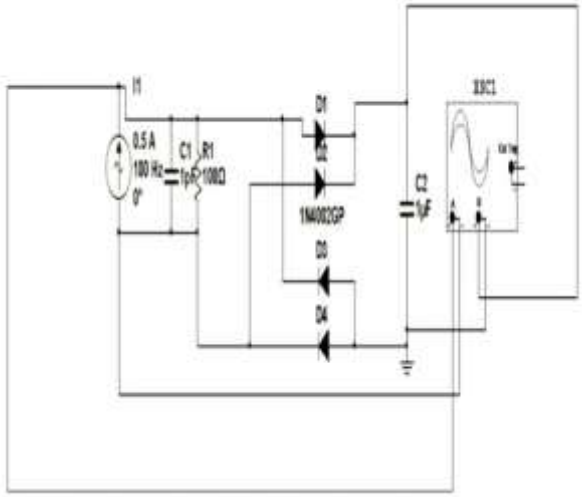

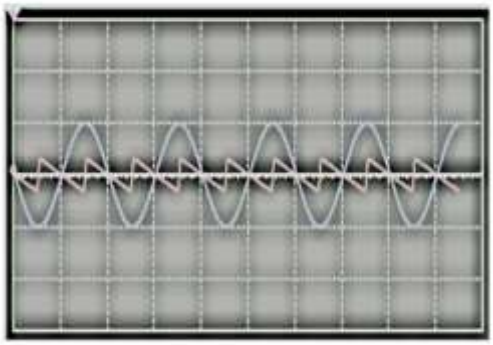

Fig. (c): Simulation Result

The piezoelectric effect converts mechanical strain into electric current or voltage. This strain can come from many different sources. Human motion, low frequency seismic vibrations, and acoustic noise are everyday examples. Except in rare instances the piezoelectric effect operates in AC requiring time-varying inputs at mechanical resonance to be efficient. Most piezoelectric electricity sources produce power on the order of mill watts, too small for system application, but enough for hand-held devices such as some commercially available self-winding wristwatches. One proposal is that they are used for micro-scale devices, such as in a device harvesting micro-hydraulic energy. In this device, the flow of pressurized hydraulic fluid drives a reciprocating piston supported by three piezoelectric elements which convert the pressure fluctuations into an alternating current

i) The linear relationship between stress X_{ik} applied to a piezoelectric material and resulting charge density D_i is known as the direct piezoelectric effect and may be written as,

$$D_i=d_{ij}k*X_{jk}$$

ii) Where d_{ijk} ($C\ N^{-1}$) is a third-rank tensor of piezoelectric coefficients.

iii) Another interesting property of piezoelectric material is they change their dimensions (contract or expand) when an electric field is applied to them.

Piezoelectricity

The elements of symmetry that are utilized by crystallographers to define symmetry about a point in space, for example, the central point of unit cell, are:
a point (center) of symmetry,

i) Axes of rotation
ii) mirror planes
iii) Combinations of these

Piezoelectric and Subgroup

These 32 point groups are subdivisions of 5 basic crystal systems:

i) Triclinic
ii) Monoclinic
iii) Orthorhombic
iv) Tetragonal
v) Rhombohedra (trigonal)

CONCLUSION

From the several methods available in order to integrate energy generating elements harvesting human energy, piezoelectric materials associated with electrostatic generator seem to be one of the most promising elements. In particular, electro active polymers are especially interesting due to their low cost, flexibility and easy integration into elements such as clothes and shoes. In this paper electro active polymers based in PVDF have been used in order to fabricate an energy harvesting system fully integrated into the sole of a shoe. Conventional methods were used in order to fabricate the sole, with no modification of the industrial production process. Through the simple configuration and electronics, energy harvesting is possible. In order to get energy values suitable for the functioning of electronic appliances, improvements in the material in order to improve electromechanical conversion, the readout electronics, in order to optimize the energy transfer and precise determination of the geometry and number of the piezoelectric generators should be performed

REFERENCES

[1] A. Khaligh, P. Zeng, and C. Zheng, "Kinetic Energy Harvesting Using Piezoelectric and Electromagnetic Technologies State of the Art", *IEEE Transactions on Industrial Electronics*, vol. 57, no. 3, pp. 850-860, March 2010.

[2] Frontoni, E., Mancini, A., Zingaretti, P., Gatto, A. ,"Energy harvesting for smart shoes: A real life application", Proceedings of the ASME *Design Engineering Technical Conference, 2013.*

[3] Guti`errez, N.I. Dopico, C. Gonzlez, S. Zazo, J. Jimnez-Leube, and I. Raos, "Cattle-Powered Node Experience in a Heterogeneous Network for Localization of Herds*", IEEE Transactins on Industrial Electronics,* vol. 60, no. 8, pp. 3176-3184, August 2013

[4] Ishida, K.; Huang, T.C.; Honda, K.; Shinozuka, Y.; Fuketa, H.; Yokota, T.; Sakurai, "Insole pedometer with piezoelectric energy harvester and 2v organic circuits"; *IEEE J. Solid State Circuits, 2013 pp. 255–264.*

[5] J.A. Paradiso, "Energy Scavenging for Mobile and Wireless Electronics*", Massachusetts Institute of Technology Media Laboratory Thad Starner, Georgia Institute of Technology, GVU Center, 2008.*

[6] J.M. Gilbert, and F. Balouchi, "Comparison of Energy Harvesting Systems for Wireless Sensor Networks", *International Journal of Automation and Computing*, vol. 05, no. 4, pp. 334-347, October 2008.

[7] Khaligh, P. Zeng, and C. Zheng, "Kinetic Energy Harvesting Using Piezoelectric and Electromagnetic Technologies State of the Art*", IEEE Transactions on Industrial Electronics*, vol. 57, no. 3, pp. 850-860, March 2010.

[8] P. Chapman and M. Raju, "*Designing power systems to meet energy harvesting needs", Tech Online India vol. 8, no. 42, 2008*

[9] P.D. Mitcheson, E.M. Yeatman, G.K. Rao, A.S. Holmes,T.C. Green, *"Energy Harvesting From Human and Machine Motion for Wireless Electronic Devices", Proceedings of the IEEE*, vol. 96, no. 9, September 2008.

[10] R. Riemer, and A. Shapiro, "Biomechanical energy harvesting from human motion:theory, state of the art, design guidelines, and future directions*"*