Network Stability Management for 3G/LTE with Handoff Operation

[1]Mr.Mohit Bhadla, [2]Dr.Ajay Raval

[1]Ph.d Scholar, [2]Dy.Manager
[1]Computer Engineering Department
[1]Rai University, Dholka, India

***Abstract*: The femtocell is initially known as Home Base Station (HBS) dedicated for the residential usage where only the primary user has the access authority. Recent investigation evolved to the femtocell or small cell that allows the open access of any mobile subscribers (i.e. the indoor small BSs deployed by the operator in the malls). Our basic aim is focus on such network herein termed as the femtocell and macrocell network where the macrocell overlaps with the densely deployed small BS. The discontinuous coverage of microcell causes the increased registration signaling overhead in the femtocell and microcell network where the dense femtocellls overlapped with a macrocell are partitioned into small Tracking Areas (TAs). After Survey and new approach known as Delay Registration (DR) algorithm is proposed for overhead reduction with the expense of sacrificing the traffic offloading capability of the femtocell and macrocell in such case and also handoff management. However, its compatibility is greatly restricted because its effective execution requires the accurate estimation of the mobile station (MS) information and Network parameter as well. We design a new scheme to enable both the low signaling cost, location update without the complicated information estimation and the traffic offloading using the inter-cell handover. In this thesis, proposed methodology has been presented. This proposed system is implemented in Matlab 2013a. It will show to us some affected parameters are Network Channel Capacity, offloading traffic, overlapped cell with one area to another area we used here in algorithm DR algorithms and Reduce Overhead Signaling**

***Index Terms*: MIMO, HBS, Femtocell, Macrocell, DR Algorithm**

I. INTRODUCTION

Recently, with the highest increase of various mobile users around within the world, total mobile and network traffics of the whole mobile world are exponentially growing. Among these users, most of them highly need high-data-rate and low-delay transmissions and wireless telecommunication systems, the primary challenge is to enhance the indoor and outdoor coverage, capacity raise as well on give users the mobile services with high information rates in a very price effective approach. [22] Concern feature of the femtocell and Macrocell technology are users need User instrumentality (UE). The deployment price of the femtocell is terribly low whereas it provides a high rate. Thus, the organization of femtocells at a large scale is that the final objective of this technology. [11] In Fact, a well-design femtocell and macrocell-integrated network can massive amounts of traffic from full and pricy macrocell networks to femtocell networks. They are associated to the system operator finished an External and internal factor which are generated in Peripherals. E.g. Digital Subscriber Line (DSL), optical fibre, Coaxial Cables etc. For our situation, the macrocell will comprise of long fluctuate base stations (macrocells) that gives cell inclusion to portable clients, while the femtocell can be include short shift passages (femtocells) that give gigantic throughputs and new applications to indoor clients. [36] Commencing a Handoff demonstrate call is such partner or significant issue wherever the client has serious control levels starter from Macro Base Station (MBS) to Femto Base Station (FBS). From a Base Station's (BS) viewpoint, there might be a few clients through closed SNR esteems requiring administration anyway all clients can't be suited owing to data measure impediment. The intermittent coverage of femtocell and macrocell origins the increased registration signaling upstairs in the femtocell and macrocell network wherever the dense femtocells overlapped with a macrocell area unit partitioned off into tiny TAs (Tracking Areas).Postponement Registration Mechanisam (DR) algorithm is proposal for above your head reduction with the expense of sacrificing the traffic ridding capability of the femtocell in such case.[21] However, its feasibility is greatly restricted as a result of its actual application needs the correct estimation of the mobile station (MS) data. In this paper we style a distinct approach to alter each the low sign price location update while not the sophisticated data estimation and also the traffic offloading victimization the inter-cell relinquishment. The Scientific analysis and the simulation experiments are conducted for the performance analysis and DR rule in reducing the sign price whereas achieving the higher ability to the high and various quality atmosphere. We are legitimize at building up a low multifaceted nature rule with little stay period earlier giving off a macrocell customer to a neighboring femtocell and the other way around. At the point when the assortment of clients inside the system is littler contrasted with the out there Femto Base Station (FBS), we delegate a higher execution in scale back inessential handoffs and femtocell innovation has been propose to dump client data movement from the macrocell to the femtocell and expand the limited inclusion of the versatile correspondence Network. [29].it is to be sanction and well maintained to be organized part near to be approach and rectify as informative search to be industry level and approach level known has to be implicated by information and near to be established comparison point of view that can be identified of technical issue and hence register with same infrastructure for specific issue no one can be interfere with some of the cases and 4g communication to be registered with for some of the cases and hence parametric cases for now initially registered with higher segment to be informal and formal infrastructure. Specific system for 4g communication and hence it is to be paid for given channel and communication for result Femtocells shape an essential component of the plans of action for pushing ahead with numerous sorts of cell media communications arrange. While they work well with CDMA innovation, they will likewise have the capacity to be utilized with LTE,

long haul development frameworks. LTE utilizes OFDM as the flag design, and along these lines LTE femtocells will expect advancement to be embraced to guarantee that the ideal task is accomplished. In any case LTE femtocells are on the guides of numerous producers and they will show up at the appointed time. Femtocells are currently an imperative piece of the advancement approach for cell broadcastings administrators. Not exclusively do femtocells give extra favorable circumstances to clients as far as enhanced execution inside the home, or corporate office, yet they likewise give the likelihood to extra administrations and the guarantee of lower charges. They correspondingly offer the difference in intersection where a solitary telephone can be utilized in its place of the landline and additionally to meander

II. PROBLEM STATEMENT

Radio correspondence has come a long methodology from 1G Advanced portable Systems (Amps) voice to Evolved 3G expanded Voice data Optimized (EVDO), High Speed Packet Access in addition to (HSPA+) and 4G Long Term Evolution (LTE) currently.[14][11][16] Spectrum is a rare asset. While this remaining parts a consistent with confined assortment of recurrence groups out there, the general execution of the system is foreseen to rise numerous folds. Each moment they might want to suit extra assortment of clients, gadgets and better quality administrations increment on the system. Numerous new innovations encourage bolster this regularly developing might want. [31][35][46] With its high information exchange limit and union of a couple of measures, 4G will oblige incalculable non-existent applications for mobile phones. Some trust that clients will be able to buy basic needs, watch motion pictures, and open their carports all with one single cell phone. Specialists have expressed that 4G gadgets will vary from present day cell phones in that there will be less route menus.

Comparing Key Parameters of 4G with 3G

	3G (including 2.5G, sub3G)	4G
Major Requirement Driving Architecture	Predominantly voice driven - data was always add on	Converged data and voice over IP
Network Architecture	Wide area cell-based	Hybrid - Integration of Wireless LAN (WiFi, Bluetooth) and wide area
Speeds	384 Kbps to 2 Mbps	20 to 100 Mbps in mobile mode
Frequency Band	Dependent on country or continent (1800-2400 MHz)	Higher frequency bands (2-8 GHz)
Bandwidth	5-20 MHz	100 MHz (or more)
Switching Design Basis	Circuit and Packet	All digital with packetized voice
Access Technologies	W-CDMA, 1xRTT, Edge	OFDM and MC-CDMA (Multi Carrier CDMA)
Forward Error Correction	Convolution rate 1/2, 1/3	Concatenated coding scheme
Component Design	Optimized antenna design, multi-band adapters	Smarter Antennas, software multilane and wideband radios
IP	A number of air link protocols, including IP 5.0	All IP (IP6.0)

III. ISSUES WITH CURRENT NETWORKS

IV. A Wireless association, henceforth should be some of helpful arrangement of a social affair of remote implied organize nomad hubs. Also, some way or another since certain gathering hubs might be sensible and not to act naturally of the unending blend of a transport hub, interface and in suspended due for in the middle of projections share to go about as switches to quicken the information to the getting hubs. Course-plotting rules give the way and should be protected arrangement of revelation and preservation instruments for each versatile swelling in the system and interfacing interconnection with every other projection of the system. With bound together undiplomatically, these steering traditions experience the ill effects of various deficiencies: 1. Versatility and possibility complexities with expanding system measure. 2. Their monotonous is just ideal and precise further down certain system conditions for portability administration (versatility, arrange stack, organize topology and so on). Existing Wireless 3GNET can be viewed as an independent framework and benefit of a multichip remote remittance to the Internet. A great deal of work has been done in stoppage and emphasis of Excellence of Provision (QoS) in the Internet, however awkwardly none of them can be ardently utilized in Wireless 3GNETs since of the data transmission restrictions and vigorous framework topology of Wireless 3GNETs. To help QoS, the connection state proof, for example, interlude, transfer speed, cost, misfortune rate, and foul

up rate in the framework would be sensible and advantageous. Be that as it may, achievement and organization the connection state or separation vector considerable in Wireless 3GNETs is exceptionally animating in light of the fact that the overwhelming nature and range of a remote bond is able to change with the close-by positions. Also, the source restrictions and the development of hosts make belonging densest. The experience we confront is to mechanical assembly complex QoS usefulness with deficient available things in a dynamic troposphere. Remote information has dynamic enormously over the previous decade, familiarizing a wide cluster of procedures with cooperating capacities. Remote availability is unquestionably offered for a few gadgets, yet it is flawed to couple of hotspots, and requires giving to particular administrations. Moreover, the class of gathering is once in a while palatable for any since make a beeline for base transfer speed tenders, which are probably going to drive the walkway for these methodologies. These are formed by a get together of remote experienced gadgets that join placid and technique a framework, without the assistance of a past structure, like a base place. The normally used 807.11b MAC and TCP tradition [61] [62] survey support for a method for assignment. Such buildings are regularly utilized in instances of quick dispersion, in spots lacking and subsequently to be satisfactory association, or to encourage coordinate declaration among hubs and some other parameter when the base post turns into the bottleneck and great cooperation and well affirmation. Remote characterizations have end up being increasingly present in the system arcade. The recklessness after remote systems administration is multi-jump transferring, retransmission which assets that the correspondences are scattered by alternate hubs if the objective hub isn't straightforwardly inside reach. The nonattendance of any of the focal not to be interface controller and base position to produce makes it hard to achieve the system and hub sending office the hubs or terminuses of these networks are savvy sensors, cell earpieces, PDAAs and workstations. The remote information correspondence and systems colleague subsequently it is possible that it is Bluetooth [8] and 802.11 [4] permit proficient correspondence and ought to speak to all normal and fringe thought and are regularly utilized in military, trade and sequestered zones. With different rewards these systems have limitless indicates yet be submitted. A full detail of the framework is existing beneath

V. HANDOFF MANAGEMENT

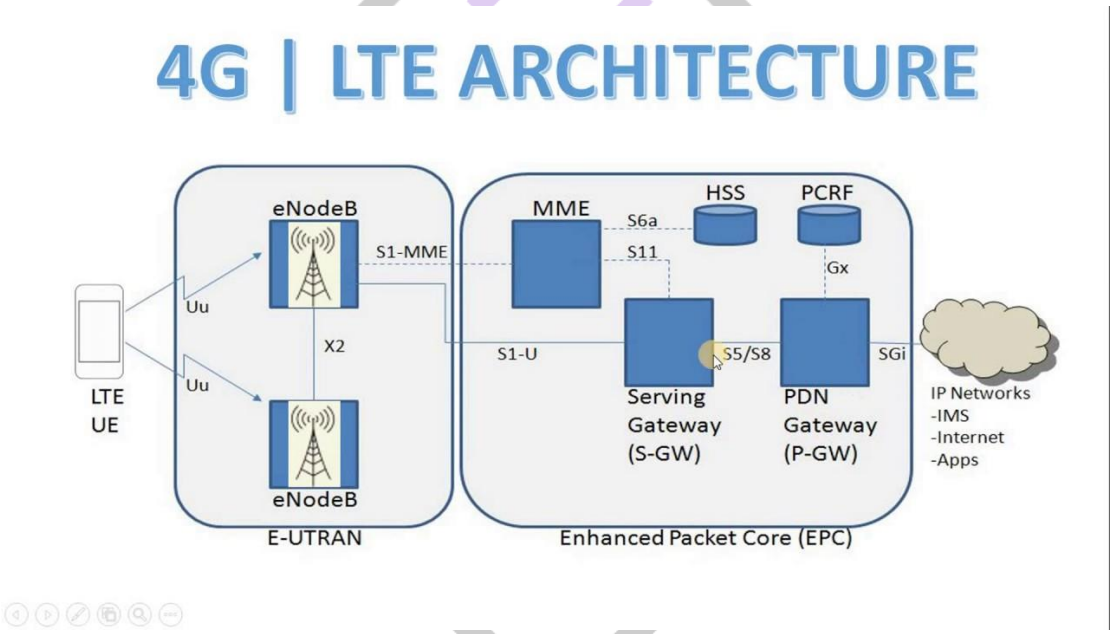

With the advent of femtocells, there are a ton of challenges within the relinquishment call. Femtocells are introduced to give higher coverage for indoor environments (residential, commercial and workplace environments) and conjointly to scale back the load on the microcell. With high deployment of femtocells, there could be lots of cells inside a selected space. This situation has introduced new challenges within the relinquishment call procedure. One of those challenges would be reducing unnecessary and frequent handovers. Basically Femtocell are nothing but some of the given scenario and given information of the challenges of introduction of some of given scenario specific same cases in information and communication channel. Now it has strict to be diagnosed as informative channel and given scenarios.

PROACTIVE & REACTIVE HANDOVER:
The serving cell can perform relinquishment mistreatment 2 relinquishment approaches i.e. proactive and reactive handover, which disagree in triggering relinquishment. [36]

a) Proactive Handover: In this methodology, handover will happen whenever before the flag quality of serving eNB achieves edge. This handover methodology gauges UE position before UE achieves that position. At whatever point the UE has discovered another objective eNB flag (or HeNBs SINR), the serving eNB figures the time left to trigger the ordinary surrender, in view of bound limit on time abandoned, it performs handover. This handover instrument hopes to downsize parcel drop. [42]

b) Reactive Handover: Femtocells have a small coverage thanks to lower power. Because high density of femtocells, the UE in femtocell network encounters frequent and unnecessary relinquishment. To reduce the inessential and frequent handovers overhead

in the interior the network, the reactive handover approach is used. In this handover instrument, it tends to delay the assignment as long as attainable, even though it's discovered the great signal weakness from different cells. The handover is engaged place solely once the UE effectively loses its signal weakness from serving cell. [42]

ALGORITHM & EQUATION

```
Initialize T = 0
While 1
  If user j is connected to the i-th FBS
    While T < T_m
      If η_{0,j} > min_{k∈U_0} η_{k,0} and η_{0,j} > η_{i,j}
        T = T + 1
      Else
        T = 0
      End if
      Wait for a time interval
    End while
    User j is connected to MBS and reset T
  End if
  If user j is connected to the MBS
    Find F_i = {i | η_{0,j} < min_{i≠0} η_{i,j}}
    While F_i is not empty
      Find i* = arg max_{i∈F_i} n..n_{j∈U_i} η_{i,j}
      While T < T_f
        If η_{0,j} < min_{k∈U_{i*}} η_{i*,k}
          T = T + 1
        Else
          T = 0 and break
        End if
        Wait for a time interval
      End while
    End while
    User j is connected to the j*-th BS and reset T
  End if
End while
```

Let P_0 be the MBS communicate power and $h_{0,K}$ be the channel gain amongst the MBS and k-th user. Likewise, P_i and $h_{i,K}$where $i \geq 1$ denote the communicate power of the i-th FBS as well as the station gain between the i-th FBS and k-th user. We assume an associate Supplementary white Gaussian sound (AWGN) at Mobile users with influence densityσ^2 [1] [3]. The capacity at the k-th user from its plateful MBS is given by:

$$C_k = \frac{B}{N_0} log_2\left(1 + \frac{|h_{0,k}|2\ P_0}{\sigma^2 + I_{0,k}}\right) (1)$$

Here B is the network bandwidth, N_0 is the quantity of MBS users, and $I_{0,k} = \sum_{i=1}^{M} |h_{l,k}|^2 P_i$ is the intrusion from FBS's. We undertake the bandwidth is likewise billed to all attended users [1] [3]. The capacity at the k-th operator from the i-th FBS is given by:

$$C_j = \frac{B}{N_i} log_2\left(1 + \frac{|h_{i,j}|2\ P_i}{\sigma^2 + I_{i,j}}\right) (2)$$

Where N_i is the quantity of users served by the i-th FBS and $I_{i,j} = \sum_{l=1,l=i}^{M} |h_{l,k}|^2 P_l$is the interfering from the MBS and different FBS's.

The volume at the j-th user from the i-th BS is written by coalescing equations (1) and (2) as follows:

$$C_j = \frac{B}{N_i} log_2\left(1 + \frac{|h_{i,j}|2\ P_i}{\sigma^2 + Ij - |h_{i,j}|2P_i}\right)$$

$$C_j = \frac{B}{N_i} log_2\left(1 + \frac{\sigma^2 + I_j}{\sigma^2 + I_j - |h_{i,j}|2P_i}\right)$$

$$C_j = \frac{B}{N_i} log_2\left(\frac{1}{1 - n_{i,j}}\right) \quad (3)$$

Where $I_j = \sum_{i=0}^{M} |h_{i,j}|^2 \; P_i$is the total of well-known power from its plateful BS and intervention from different BS's, and $n_{i,j}$=$|h_{i,j}|2P_i/(\sigma^2 + I_j)$is SINR, which is the percentage of desired power inI_j . Memorandum that I_j does not hang on on which BS theuser is unrelated to, and it is a ruthless for any BS.

COCLUSION & RESULT

In this we examined new scheme of Handoff in the femtocell/macrocell system. It disallows the cell reselection from the macrocell to femtocell, but preserves the most suitable femtocell indication available at the MS which is used to generate the handover to femotcell for stream of traffic offloading when call arrives.[7] It reduces the motioning cost meanwhile preserving the traffic offload capability of the femtocell, but requires any modification on the existing system.[16][17][18] The presentation assessment between our solution and another approach termed as Delay Registration (DR) algorithm is conducted with both the analysis and simulation. [21][24] We are study our application of the DR algorithm in the cost discount with the good adaptability to the diverse MS actions in high mobility. [32] We perceive the need for implementing femtocell and macrocell technology in the next generation wireless communication. [43] [5] the inventive matrix-based MIMO model is too complex for network level analysis and cross-layer optimization. Simple models based on DoF abstraction only require numeric multiplications on DoFs for SM and IC and thus offer significant benefits over the matrix-based model. However, existing DoF-based models are based on appropriate conditions on DoFs and data streams and cannot agreement the same rate region as that under the matrix-based model. In this paper, we technologically advanced an optimal DoF-based model for a multi-hop MIMO network under SM and IC. It retains the same effortlessness as previous DoF-based models while offering the same achievable rate region as that by the matrix-based model. Our optimal DoF based model can be used as a reference model for theoretical research on multi-hop MIMO networks. In 4G mobile mesosphere, numerous wireless access technologies will coexist and complement each other.

REFERENCES

[1] Abbas, A. M., & Kure, Ø. (2010). A deadline-driven probabilistic quality of service routing for mobile Ad hoc networks. *Journal of Digital Information Management*, *8*(2), 136-142.

[2] Abbas, A. M., & Kure, O. (2010). Quality of Service in mobile ad hoc networks: a survey. *International Journal of Ad Hoc and Ubiquitous Computing*, *6*(2), 75-98.

[3] Access, E. U. T. R. (2008). Medium Access Control (MAC) Protocol Specification. *Release*, *8*, 30.

[4] Access, E. U. T. R. (2012). Radio Link Control (RLC) Protocol Specification. *V13*, *2*.

[5] Akyildiz, L. F., McNair, J., Ho, J., Uzunalioglu, H., & Wang, W. (1998). Mobility management in current and future communications networks. *IEEE network*, *12*(4), 39-49.

[6] Allman, M., Floyd, S., & Partridge, C. (2002). Increasing TCP's initial window (No. RFC 3390).

[7] AlSoufy, K. A. M., & Abbas, A. M. (2008, December). Lifetime and queue length constrained quality of service routing for mobile ad hoc networks. In *India Conference, 2008. INDICON 2008. Annual IEEE* (Vol. 1, pp. 177-182). IEEE.

[8] AlSoufy, K. A. M., & Abbas, A. M. (2008, December). Lifetime and queue length constrained quality of service routing for mobile ad hoc networks. In *India Conference, 2008. INDICON 2008. Annual IEEE* (Vol. 1, pp. 189-192). IEEE.

[9] Araniti, G., Cosmas, J., Iera, A., Molinaro, A., Orsino, A., & Scopelliti, P. (2014, June). Energy efficient handover algorithm for green radio networks. In *Broadband Multimedia Systems and Broadcasting (BMSB), 2014 IEEE International Symposium on* (pp. 1-6). IEEE.

[10] Atkinson, R., & Kent, S. (2004). IP authentication header.

[11] Atkinson, R., & Kent, S. (1998). Security architecture for the internet protocol.

[12] Atkinson, R., & Kent, S. (2007). Security architecture for the internet protocol.(v3)

[13] Atkinson, R., & Kent, S. (2014). IP authentication header.

[14] Bai, T., Wang, Y., Liu, Y., & Zhang, L. (2011, September). A policy-based handover mechanism between femtocell and macrocell for LTE based networks. In *Communication Technology (ICCT), 2011 IEEE 13th International Conference on* (pp. 916-920). IEEE.

[15] Balakrishnan, H., Seshan, S., Amir, E., & Katz, R. H. (1995, December). Improving TCP/IP performance over wireless networks. In *Proceedings of the 1st annual international conference on Mobile computing and networking* (pp. 2-11). ACM.

[16] Bhagwat, P., Perkins, C., & Tripathi, S. (1996). Network layer mobility: an architecture and survey. *IEEE Personal Communications*, *3*(3), 54-64.

[17] Binkley, J. (2001). An integrated IPSEC and mobile-IP for free BSD. Technical Report, 1(10).

[18] Binkley, J. (2001). An integrated IPSEC and mobile-IP for freeBSD. *Technical Report*, *1*(10).

[19] Blaze, M., Keromytis, A. D., & Sanchez, L. A. (2003). IP security policy (IPSP) requirements.

[20] Bongiovanni, G., Tang, D., & Wong, C. (1981). A general multibeam satellite switching algorithm. *IEEE Transactions on Communications*, *29*(7), 1025-1036.

[21] Braden, R., Clark, D., & Shenker, S. (1994). *Integrated services in the internet architecture: an overview* (No. RFC 1633).

[22] Braden, R., Zhang, L., Berson, S., Herzog, S., & Jamin, S. (1997). *Resource reservation protocol (RSVP)--Version 1 functional specification* (No. RFC 2205).

[23] Braun, T., & Danzeisen, M. (2001). Secure mobile IP communication. In Local Computer Networks, 2001. Proceedings. LCN 2001. 26th Annual IEEE Conference on (pp. 586-593). IEEE.

[24] Campbell, A. T., Gomez, J., Kim, S., Wan, C. Y., Turanyi, Z. R., & Valkó, A. G. (2002). Comparison of IP micromobility protocols. *IEEE Wireless Communications*, *9*(1), 72-82.

[25] Cano-García, J. M., González-Parada, E., & Casilari-Perez, E. (2006, September). On the impact of RLC layer configuration parameters in UMTS internet access. In *Vehicular Technology Conference, 2006. VTC-2006 fall. 2006 IEEE 64th* (pp. 1-5). IEEE.
[26] Carpenter, B., Chang, Y. J., Fox, G., & Li, X. (1997, August). Java as a language for scientific parallel programming. In International Workshop on Languages and Compilers for Parallel Computing (pp. 340-354). Springer, Berlin, Heidelberg.
[27] Chakrabarty, M., & Misra, D. S. (2003). A comparative study of existing protocols supporting IP mobility.
[28] Chan, M. C., & Ramjee, R. (2005). TCP/IP performance over 3G wireless links with rate and delay variation. *Wireless Networks*, *11*(1-2), 81-97.
[29] Chen, L., & Heinzelman, W. B. (2005). QoS-aware routing based on bandwidth estimation for mobile ad hoc networks. *IEEE Journal on selected areas in communications*, *23*(3), 561-572.
[30] Choi, H., Song, H., Cao, G., & La Porta, T. (2005, March). Mobile multi-layered IPsec. In INFOCOM 2005. 24th Annual Joint Conference of the IEEE Computer and Communications Societies. Proceedings IEEE (Vol. 3, pp. 1929-1939). IEEE.
[31] Chowdhury, M. Z., & Jang, Y. M. (2013). Handover management in high-dense femtocellular networks. *EURASIP Journal on Wireless Communications and Networking*, *2013*(1), 6.
[32] Deering, S., & Hinden, R. (2017). *Internet protocol, version 6 (IPv6) specification* (No. RFC 8200).
[33] Dierks, T., & Allen, C. (1999). The TLS Protocol (rfc 2246). Internet Engineering Task Force (IETF).
[34] Dincer, K. (1999, April). A ubiquitous message passing interface implementation in Java: jmpi. In Parallel Processing, 1999. 13th International and 10th Symposium on Parallel and Distributed Processing, 1999. 1999 IPPS/SPDP. Proceedings (pp. 203-207). IEEE.
[35] Egelie, K. J., Graff, G. D., Strand, S. P., & Johansen, B. (2016). The emerging patent landscape of CRISPR-Cas gene editing technology. *Nature biotechnology*, *34*(10), 1025-1031.
[36] Evans, B. G., & Baughan, K. (2000). Visions of 4G. *Electronics & Communication Engineering Journal*, *12*(6), 293-303.
[37] Fineberg, V. (2009). A practical architecture for implementing end-to-end QoS in an IP network. *IEEE communications magazine*, *40*(1), 125-130.
[38] Frank, S. J. (2002). Can you patent an industry standard?. *IEEE Spectrum*, *39*(3), 14-15.
[39] Fu, H. L., Lin, P., & Lin, Y. B. (2013). Reducing signaling overhead for femtocell/macrocell networks. *IEEE Transactions on Mobile Computing*, *12*(8), 1587-1597.
[40] Fu, X., Karl, H., & Kappler, C. (2002, May). Qos-conditionalized handoff for mobile ipv6. In *International Conference on Research in Networking* (pp. 721-730). Springer, Berlin, Heidelberg.