To study the effect of nozzle position in shell and tube type heat exchanger

[1]Jigar Soni, [2]Prof. Sachin Patel

[1]PG Student, [2]Assistant Professor
Laljibhai Chaturbhai Institute of Technology, Bhandu

***Abstract*: Heat exchangers are widely used in various industries. As these devices subjected to high pressure and temperature, it is necessary to design their key parts with special care. Under different loading conditions higher stresses will generate at the areas of discontinuity in the geometry. Most cases the area is subjected to higher stresses are regions like shell to nozzle, shell to saddle and shell to head junctions. These higher stresses regions may affect the efficiency of the heat exchanger and may lead to dangerous results sometimes. These being a weakest part it is highly recommended to design and analyse them with proper precautions.**

***Index Terms*: Shell & Tube Heat Exchanger, Nozzle, Pressure Vessel**

I. Shell and tube Heat Exchanger [1]

A shell and tube heat exchanger is a class of heat exchanger designs. It is the most common type of heat exchanger in oil refineries and other large chemical processes, and is suited for higher-pressure applications. As its name implies, this type of heat exchanger consists of a shell (a large pressure vessel) with a bundle of tubes inside it. One fluid runs through the tubes, and another fluid flows over the tubes (through the shell) to transfer heat between the two fluids. The set of tubes is called a tube bundle, and may be composed of several types of tubes: plain, longitudinally finned, etc.

Two fluids, of different starting temperatures, flow through the heat exchanger. One flows through the tubes (the tube side) and the other flows outside the tubes but inside the shell (the shell side). Heat is transferred from one fluid to the other through the tube walls, either from tube side to shell side or vice versa. The fluids can be either liquids or gases on either the shell or the tube side. In order to transfer heat efficiently, a large heat transfer area should be used, leading to the use of many tubes. In this way, waste heat can be put to use. This is an efficient way to conserve energy.

Classification of Shell and Tube Exchanger [2]

According to shell and tube, heat exchangers are classified as:

1. Fixed tube sheet heat exchanger
2. U-tube heat exchange
3. Floating head heat exchanger

Parts of Heat Exchanger [3]

There are four main parts of heat exchanger shown in fig.

1. Shell
2. Head
3. Support
4. Nozzle
5. Tube
6. Tube sheets
7. Pass Divider
8. Baffles

II. Literature Review

Z.F. Sang, Z.L. Wang, L.P. Xue and G.E.O. [4] [5] Widera had discussed plastic limit moment of nozzles in cylindrical vessels with different d/D ratios under out-of-plane moment loading. Three full size test model were designed and fabricated. A 3D nonlinear finite element numerical simulation was also performed. A twice elastic slope plastic moment on the nozzle was obtained approximately by load-displacement and load-strain curves. The results show the plastic loads determined by test and numerical simulation methods are in good agreement. The results can serve as a basis for developing an advanced design guideline by limit analysis for cylindrical vessel with a nozzle under external loads.

J.Fang, Q.H.Tang, Z.F.Sang [6] had presented work on a comparative study of strength behaviour for cylindrical shell interaction with and without pad reinforcement under out-of-plane moment loading on nozzle, three pairs of full-scale test vessel with different mean diameter of nozzle to mean diameter of cylindrical vessel ratio were designed and fabricated for testing and analysis ,the material of the cylinder, reinforcement pad and the nozzle are low carbon steel, result from this research indicate that the maximum elastic stress and stress ratio are reduced by pad reinforcement, they found that in test reduction rate is 20-60% and in finite element analysis reduction rate is 28-59% and its rate of reduction depend upon structure and dimension of the vessel for example D/d ratio, and result also indicate that the plastic limit of nozzle in cylinder vessel is increased by pad reinforcement, generally rate of increase is about 40-70% from test and its larger than 40% from finite element analysis, so the conclusion given from the result that the reinforcement structure are useful under static external load on nozzle.

V.N.Skopinsky and A.B.Smetankin [7] discussed stress analysis of reinforced nozzle connections in ellipsoidal heads of pressure vessels was carried out using shell theory and the finite element method. A parametric study of the effects of the reinforcements on the maximum stresses in head-nozzle intersections under internal pressure loading was performed.

Aleksandar petrovic [8] has discussed stress analysis of cylindrical pressure vessel loaded by axial and transverse forces on the free end of a nozzle. The nozzle is placed such that the axis of the nozzle does not cross the axis of the cylindrical shell. The method of finite elements was applied to determine the state of stress in the cylindrical shell. The value obtained for the stress in the nozzle region was used to determine the following: envelope for maximum stress values; maximum values of this envelope; and distance between maximum values on the envelope and outer edge of the nozzle.

C.J. Dekker and H.J. Brink [9] have discussed internal pressure stresses at nozzle vessel junction, obtain by various analysis methods on thin shell theory, and will be compared in this study. To evaluate an improved shell based analysis method capable of accounting for the effect of the additional material in the weld, an axisymmetric 3D finite element analysis is also included. The main conclusions are that any outward weld area offers little reinforcement and that stress analysis based on thin shell theory is quite acceptable. A close comparison of local load stress calculation methods reveals considerable differences. To investigate we performed many finite element analyses of nozzles on cylinders concentrating not on the shell stresses but also on the stresses in the nozzle wall. Local load stresses were sometimes found to be much higher in the nozzle than in the shell. This led us to formulate a 'modified improved shrink ring method' and to devise multiplication charts for deriving local load nozzle stresses from local load shell stresses. Being important for a proper assessment, pressure induced stresses were investigated too. This resulted in non-dimensional parameter graphs to determine pressure induced stresses at nozzle.

Ugur Guven [10] obtained the failure pressures of thick and thin walled cylindrical pressure vessels considering the Voce hardening law and plastic orthotropic effect. The solution presented is used to compare the failure pressures of copper and brass cylindrical pressure vessels. The failure pressures of thick and thin walled cylindrical vessels are solved by numerical and closed form solutions. The solutions presented are used to compare the failure pressures copper and brass cylindrical vessels.

James Xu., Benedict Sun, & Bernard [11] had did work on local pressure stress on lateral pipe-nozzle with various angle of interaction, this paper report variation of local pressure stress factor at the junction of pipe-nozzle when its angle varies from 90 to 30 degree, the circumferential and longitudinal stress at four symmetric points around the pipe nozzle junction are plotted as function of an angle, the ALGOR finite element software was employed to model for the true pipe-nozzle geometry, the numerical stress result come from parameters beta and gamma which are the nozzle mean radius and pipe thickness, at angle 90 degree at this angle result had low value local stress, these stress increase as angle of interaction is decrease from 90 degree and stress value more decrease when angle is decrease from 45 degree, the inside crotch point B has worst circumferential stress value, and concluded that angle 90 degree local pressure stress are same at point A and B as same as point C and D due to symmetry, and it had low stress value than other angle.

Amran Ayob [12] conclude that, for all load categories, high stresses occurred at the vessel nozzle junction where there is a severe geometric discontinuity, Nozzle thrust load gives the highest stress while torsional moment gives the lowest stress, when torque is one of the combining loads, a circular interaction is proposed. For other load combinations a linear relation is proposed. Shakil Abdul Lathuef and K.Chandra Sekhar [13] discusses some of the potential unintended consequences related to Governing Thickness of shell as per ASME. Here have a scope to change the code values by take the minimum governing thickness of pressure vessel shell to the desired requirements and also relocate of nozzle location to minimize the stresses in the shell. In this paper nozzle located at five places and analysis with ANSYS here nozzle locates at shell left end, at the shell middle, at the shell right end, at dished end of both side and calculate stress. And they found from result that the stress would be Minimum at the dished end with hillside orientation. A low value of the factor of safety results in economy of material this will lead to thinner and more flexible and economical vessels. Here they evaluated the stress in the vessel by Zick analysis approach.

III. Methodology

First of all an exhaustive literature survey has been done and research gaps has been identified. Then various designs and operating parameters have been identified. Then Prepare FEM model with the identified data. Then Analysis of FEM model using Solidworks simulation then Validate FEM result.

IV. FEM Model

Dimension	Internal Diameter of Vessel, D_i	Thickness of Vessel, T	Length of Vessel, L	Half Length of Vessel, L_1	Inside Height of Vessel head, H_i	Inside Diameter of Nozzle, d_i	Thickness of Nozzle, t
Value	600 mm	6 mm	2400 mm	1200 mm	175 mm	325 mm	6 mm
Dimension	Inside height of nozzle head, h_i	Length of nozzle, l	Diameter ratio, d/D	Thickness ratio, t/T	Diameter to thickness ratio, T/D		
Value	106 mm	600 mm	0.526	1.0	101		

Model Material Properties

Material Name:	AISI 1020 Steel,	Elastic modulus:	2.05e+011 N/m^2
Model type:	Linear Elastic Isotropic	Poisson's ratio:	0.29
Failure criterion:	Max von Mises Stress	Mass density:	7870 kg/m^3
Yield strength:	3.5e+008 N/m^2	Shear modulus:	8e+010 N/m^2
Tensile strength:	4.2e+008 N/m^2	Thermal expansion coefficient:	1.17e-005 /Kelvin

Mesh information

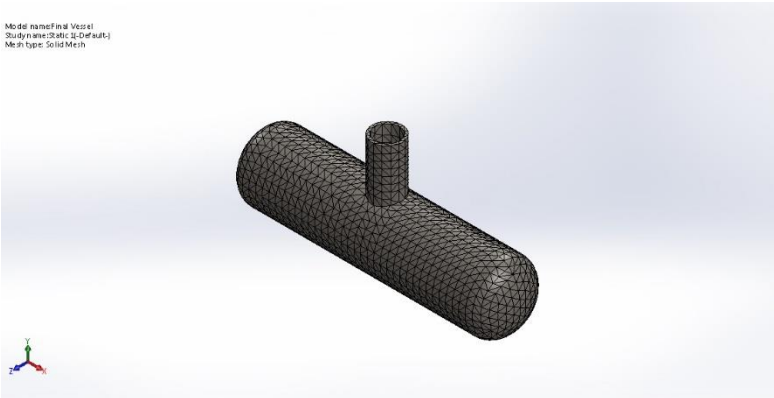

Mesh type	Solid Mesh
Element Size	0.0720806 m
Tolerance	0.00360403 m
Total Nodes	17153
Total Elements	8937

Outlet nozzle is attached
(on Mid plane)

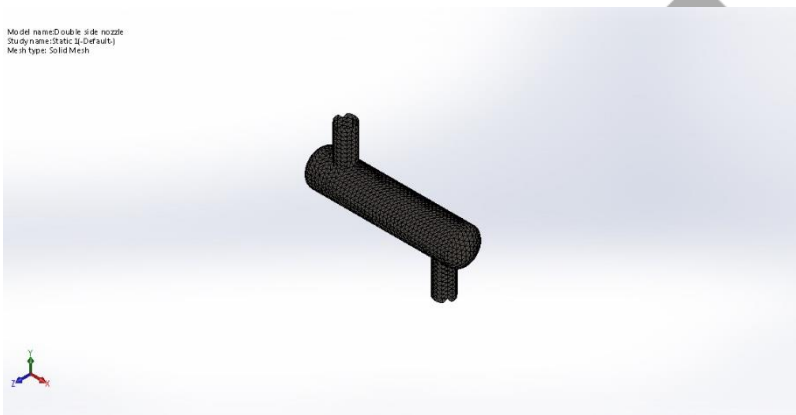

Mesh type	Solid Mesh
Element Size	0.0647576 m
Tolerance	0.00323788 m
Total Nodes	22356
Total Elements	11843

Right inlet & Left outlet nozzle
(900 mm offset both side from mid plane)

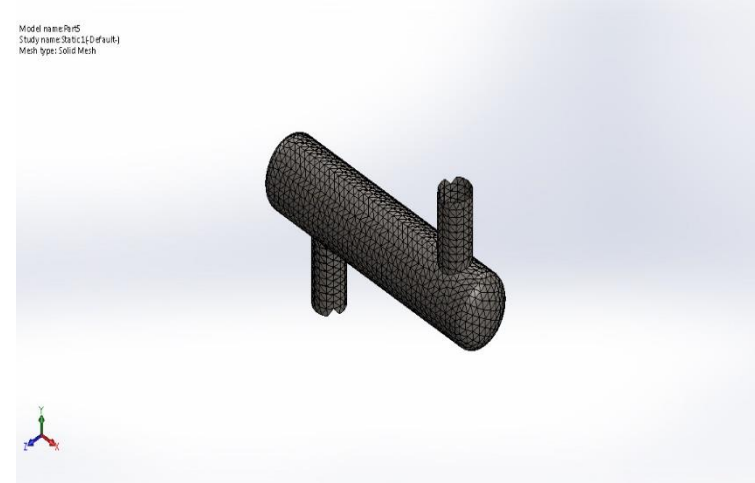

Mesh type	Solid Mesh
Element Size	0.0647576 m
Tolerance	0.00323788 m
Total Nodes	21580
Total Elements	11269

Left inlet & Right outlet nozzle
(900 mm offset both side from mid plane)

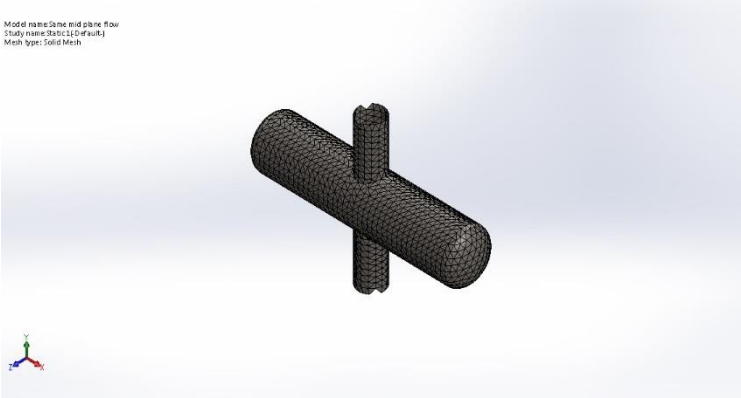

Mesh type	Solid Mesh
Element Size	0.0647578 m
Tolerance	0.00323789m
Total Nodes	22882
Total Elements	12241

Middle plane Inlet & Outlet nozzle

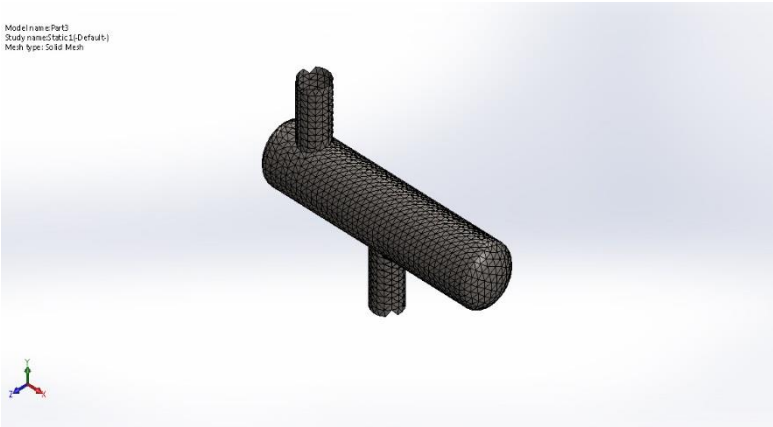

Mesh type	Solid Mesh
Element Size	0.0647578 m
Tolerance	0.00323789 m
Total Nodes	21038
Total Elements	10885

Inlet on Mid plane and outlet offset 900 mm left from mid plane

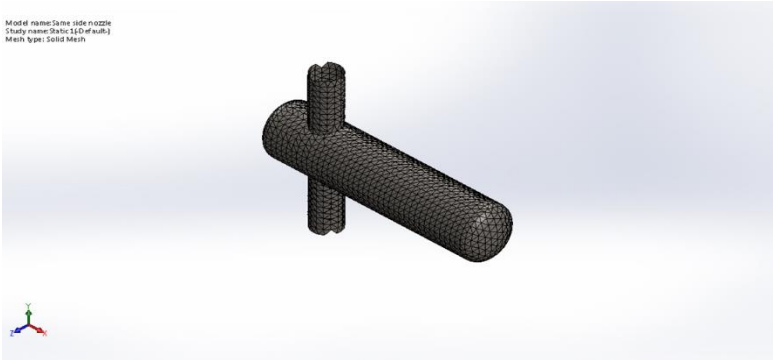

Mesh type	Solid Mesh
Element Size	0.0647578 m
Tolerance	0.00323789m
Total Nodes	20467
Total Elements	10464

Inlet & outlet is left side offset 900 mm from mid plane

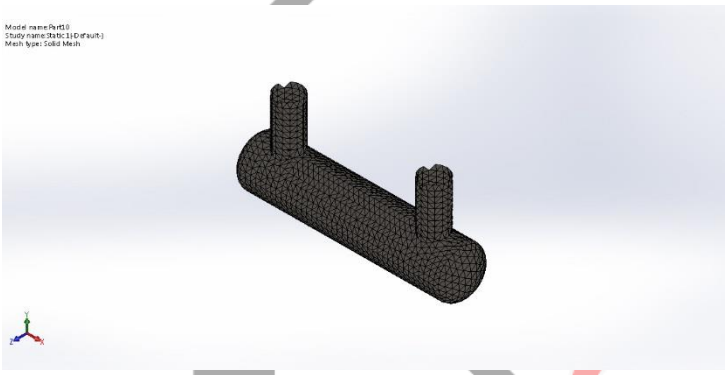

Mesh type	Solid Mesh
Element Size	0.0647578 m
Tolerance	0.00323789 m
Total Nodes	22059
Total Elements	11615

Inlet & outlet is same side

Study Result

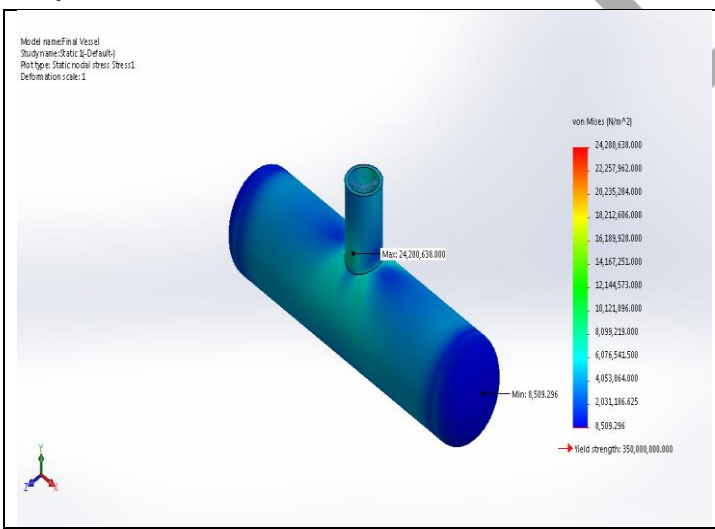

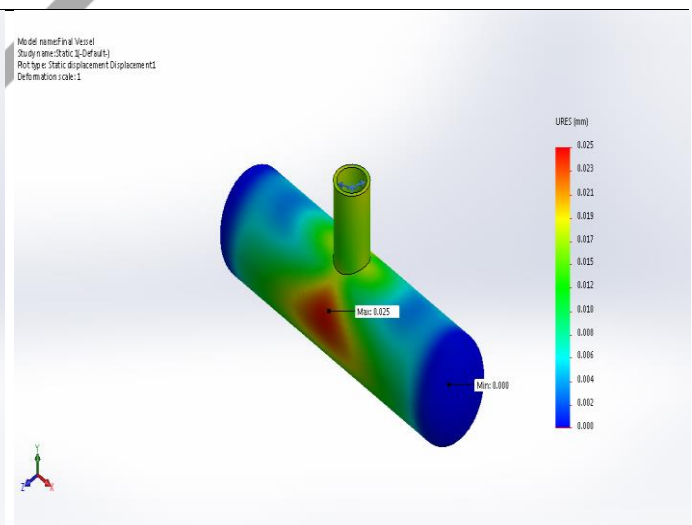

Min	Max	Min	Max
8,509.296 N/m^2 Node: 66	24,280,638.000N/m^2 Node: 1168	0.000 mm Node: 219	0.025 mm Node: 5138

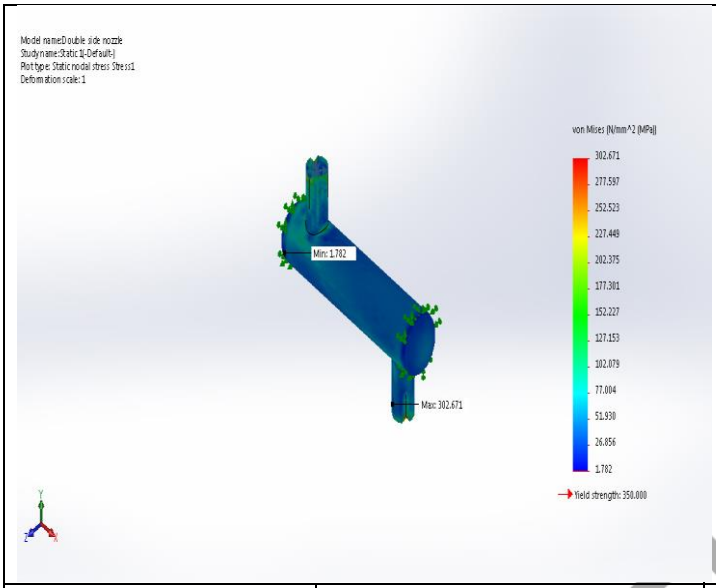

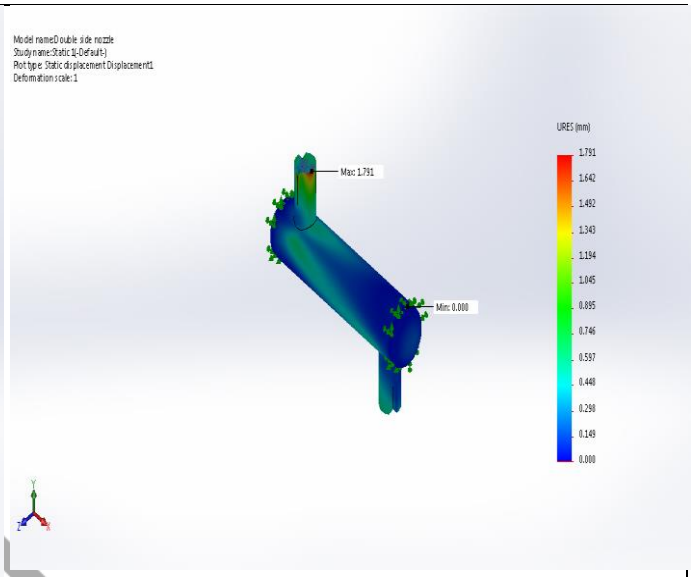

Min	Max	Min	Max
1.782 N/mm^2 (MPa) Node: 5679	302.671 N/mm^2 (MPa) Node: 371	0.000 mm Node: 179	1.791 mm Node: 649

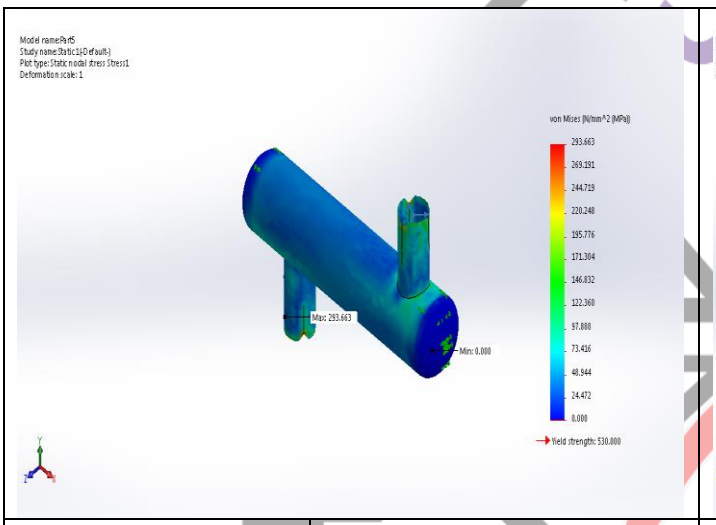

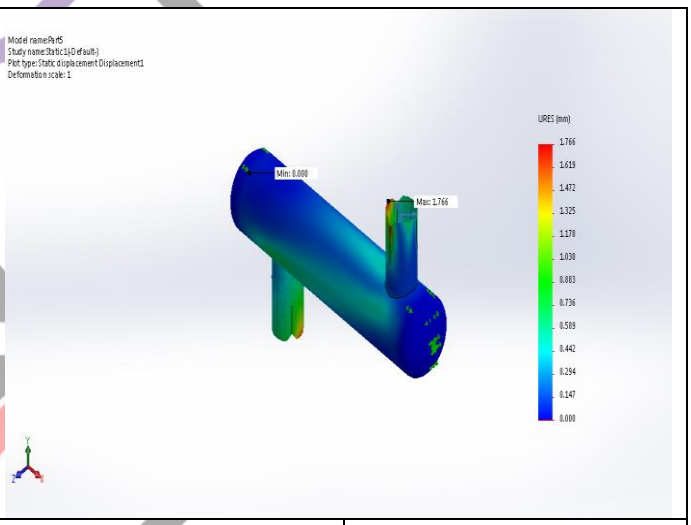

Min	Max	Min	Max
0.000 N/mm^2 (MPa) Node: 4000	293.663 N/mm^2 (MPa) Node: 371	0.000 mm Node: 179	1.766 mm Node: 708

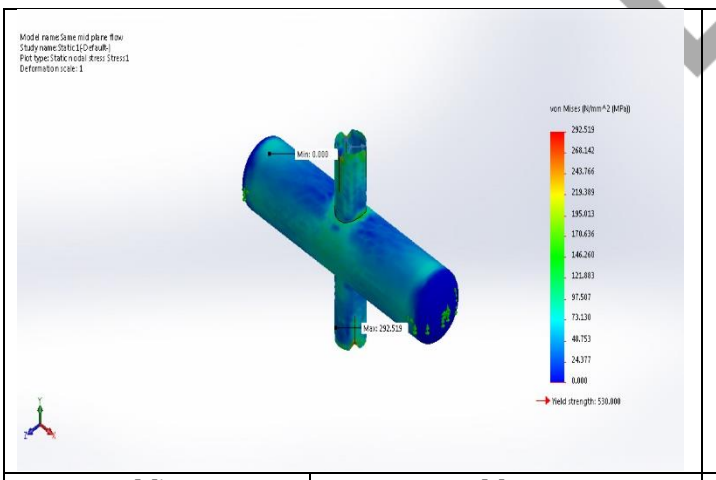

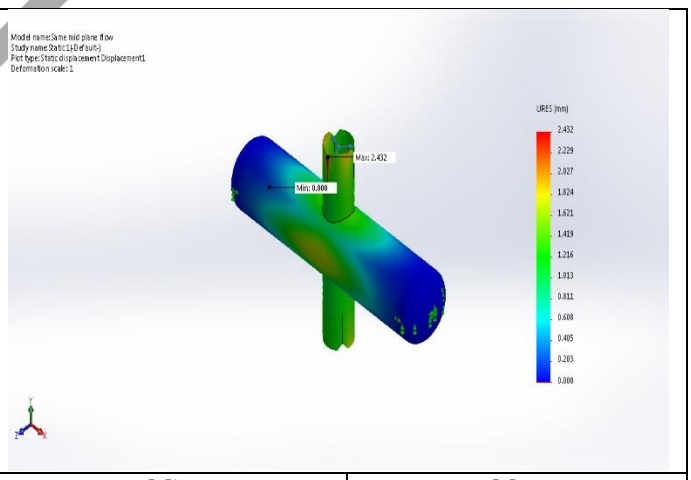

Min	Max	Min	Max
0.000 N/mm^2 (MPa) Node: 21387	292.519 N/mm^2 (MPa) Node: 363	0.000 mm Node: 175	2.432 mm Node: 645

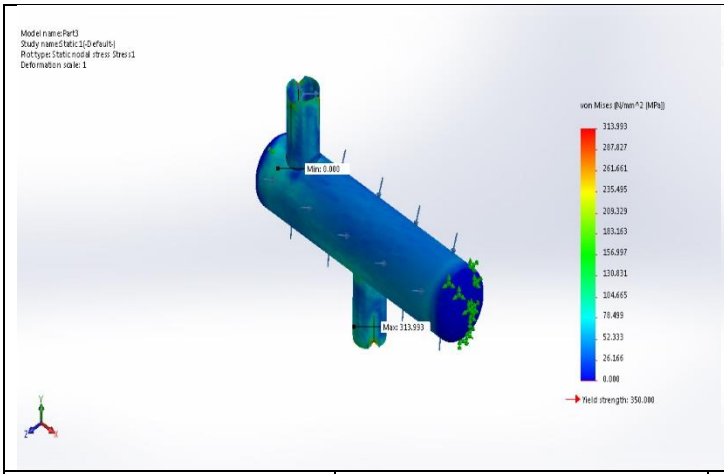

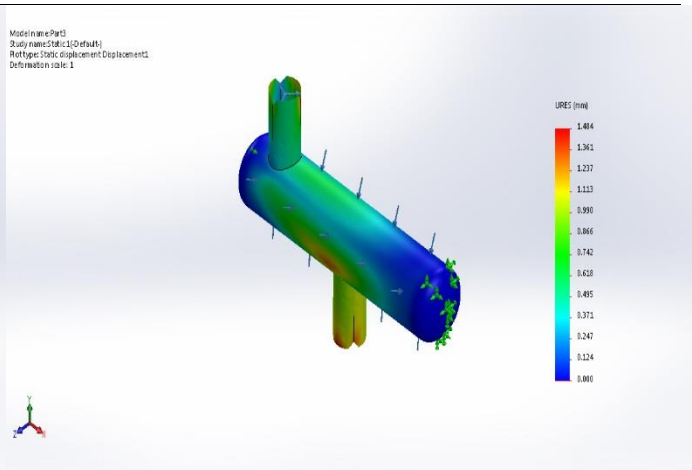

Min	Max	Min	Max
0.000 N/mm^2 (MPa) Node: 20238	313.993 N/mm^2 (MPa) Node: 371	0.000 mm Node: 1	1.484 mm Node: 438

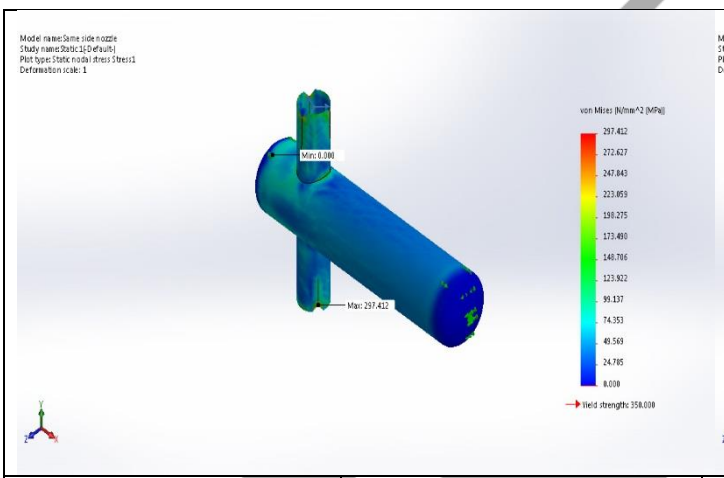

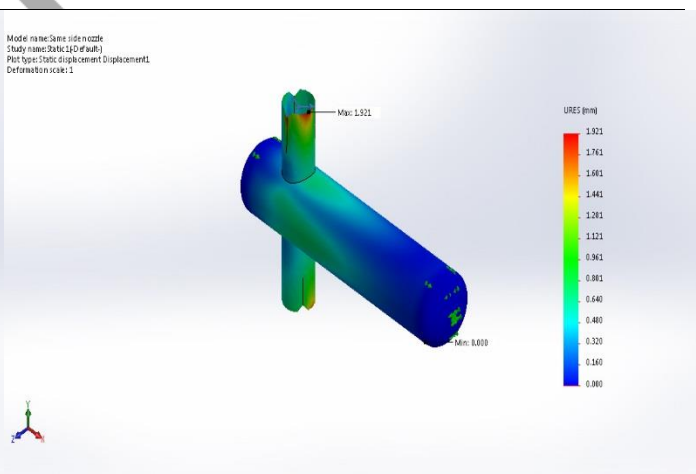

Min	Max	Min	Max
0.000 N/mm^2 (MPa) Node: 19365	297.412 N/mm^2 (MPa) Node: 435	0.000 mm Node: 179	1.921 mm Node: 649

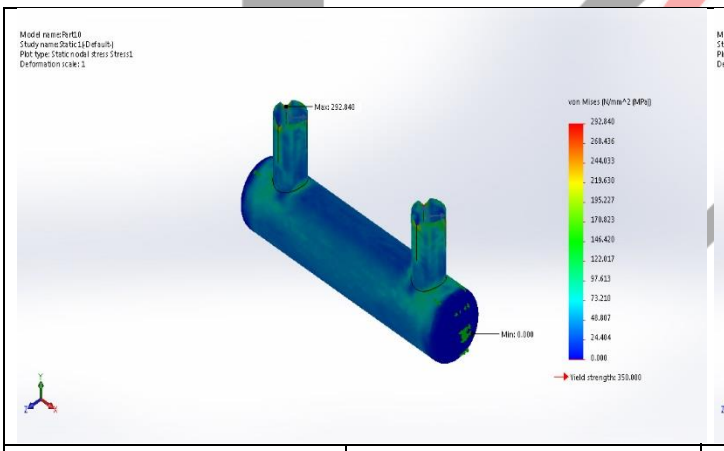

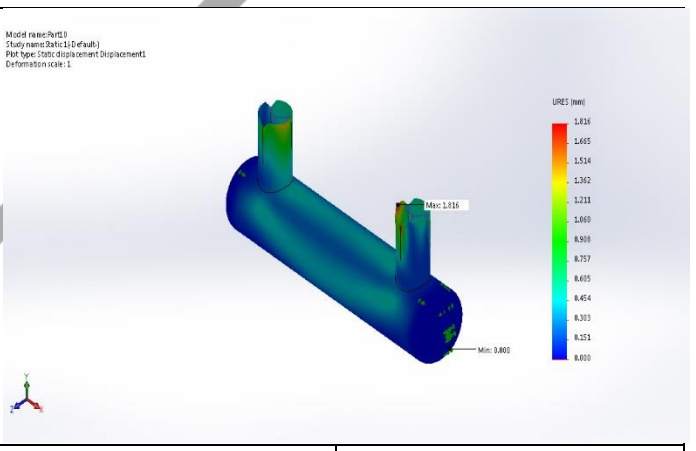

Min	Max	Min	Max
0.000 N/mm^2 (MPa) Node: 5	292.840 N/mm^2 (MPa) Node: 372	0.000 mm Node: 179	1.816 mm Node: 11691

Conclusion

Comparison of results

Types of Model	Von mises Stress (N/mm^2) (Node)		Displacement (mm) (Node)	
	Min.	**Max.**	**Min.**	**Max.**
Only outlet nozzle is attached	8.509 (66)	242.80 (1168)	0.000 (219)	0.025 (5138)
Right inlet & Left outlet nozzle	1.782 (5679)	**302.671 (371)**	0.000 (179)	1.791 (649)
Left inlet & Right outlet nozzle	0.000 (4000)	293.663 (371)	0.000 (179)	1.766 (708)
Middle plane Inlet & Outlet nozzle	0.000 (21387)	292.519 (363)	0.000 (175)	**2.432 (645)**
Inlet on Mid plane and outlet offset 900 mm left from mid plane	0.000 (20238)	313.993 (371)	0.000 (1)	1.484 (438)
Inlet & outlet is left side offset 900 mm from mid plane	0.000 (19365)	297.412 (435)	0.000 (179)	1.921 (649)
Inlet & outlet is same side	0.000 (5)	292.840 (372)	0.000 (179)	1.816 (11691)

The average stress generated in different models is very within $\pm$ 50 MPa, in which highest stress is 302.671 MPa and lowest result is 242.80 MPa.

References

[1] "Heat Exchanger," [Online]. Available: https://en.wikipedia.org/wiki/Heat_exchanger.

[2] M. Rajiv, "Effectively Design Shell and Tube Heat Exchanger," *American Institute of Chemical Engineers*, February 1998.

[3] M. Dennis, Pressure Vessel Design Manual Third Edition.

[4] L. Y. G. W. Z.F.Sang, "Limit and burst pressure for a cylinderical shell intesection with intermediate diameter ratio," *International Journal of Pressure vessels and piping* , vol. 79, pp. 341-349, 2002.

[5] L. Y. G. W. Z.F.Sang, "Plastic limit loads of nozzles in cylindrical vessels under out-of-plane moment loading," *International Jornal of Pressure Vessels and Piping 82*, pp. 638-648, 2005.

[6] Q. Z. J. Fang, "A comparative study of usefulness for pad reinforcement in cylindrical vessels under external load on nozzle," *International Journal of Pressure Vessel and Piping*, vol. 86, pp. 273-279, 2009.

[7] A. V.N.Skopinsky, "Parametric study of reinforcement of pressure vessel head with offset nozzle," *International Jornal of Pressure Vessel and Piping 80*, pp. 333-343, 2003.

[8] A. Petrovic, "Stress analysis in cylindrical pressure vessels with loads applied to the free end of a nozzle," *International Journal of Pressure Vessel and Piping 78*, pp. 485-493, 2001.

[9] H. C.J.Dekker, "Nozzles on spheres with outward weld area under internal pressure analysed be FEM and thin shell theory," *International Journal of pressure vessel and piping 77*, pp. 399-415, 2000.

[10] U. Guven, "A comparison on failure pressures of cylindrical pressure vessels," *Mechanics Research Communications (Elsevier)*, vol. 34, pp. 466-471, 2007.

[11] B. C. S. B. K. James J. Xu, "Local pressure stresses on lateral pipe-nozzle with various angle of intersection," *Nuclear Engineering and Design* , vol. 199, pp. 355-340, 2000.

[12] A. Ayob, "Stress analysis of torispherical shell with radial nozzle," *The Institution of Engineering, Malaysia*, vol. 67, 2006.

[13] K. S. Shakil Abdul Lathuef, "Design and stuctural analysis of pressure vessel due to change of nozzle location and shell thickness," *International jornal of advanced engineering research and studies*, vol. I, no. II, pp. 218-221, 2012.

[14] "Titanmf.com," [Online]. Available: https://www.titanmf.com/wp-content/uploads/2014/03/Zirconium-702-Shell-and-Tube-Heat-Exchanger-002a.jpg.