A SCALABLE APPROACH TO EFFICIENT HOUSE POWER CONSUMPTION AND CO2 MANAGEMENT THROUGH FUZZY LOGIC

[1]M.Siddhaiyan, [2]G. Dr.M.Malarvizhi Ph.D

[1]PG Scholar, [2]Assistant Professor
Department of EEE,
Gnanamani College of Technology, Namakkal, India.

***Abstract*: The paper outlines energy management concepts and the smart grid evolution. The necessity of considering energy management as a crucial innovation in load supplying to permit a more powerful penetration of renewable energy usage at the building and city level and to perform energy savings and CO_2 emissions reduction is pointed out. The driving factors to enhance the current power distribution are presented, and the benefits concerning smart grids are underlined. In the paper, a specific energy management analysis is reported by considering all the electric value chain, and the demand-side management and distributed on site control actions are described. To verify the benefit of energy management control actions, a house simulator and a grid simulator are here presented and the results discussed in three different scenarios. Moreover, in the paper, the evaluation of ecological benefits are reported, and a cost benefit analysis of the energy management system is performed. Results pointed out that with the standard control actions, the system is not economic for the end user, and only by using energy management systems with renewable energy, in site production remunerative energy savings can be reached. Finally the evolution of smart grids is presented, focusing on potential benefits and technical problems. The active grids, microgrids and virtual utility are described, and final consideration on hypothetical scenarios is presented in the conclusion.**

***Index Terms*: Power Consumption management, Smart Grids, Fuzzy Logic, power management, modeling, simulation and control of power system, smart grid technologies, intelligent control systems**

I. INTRODUCTION

Productive vitality utilization is a key factor to Europe's aggressive objectives for reasonable improvement and exercises identified with air contamination and atmosphere moving. In any case, particularly amid the mid year time frame, the total power dispersion organize in Southern Europe is working under amazingly high loads.

Also, worldwide atmosphere situations demonstrate that the normal temperature in EU Member States is probably going to ascend by 0.3– 0.7 °C in the following 10 years and will keep on expanding until at any rate the center of the century. The likelihood of extraordinary temperatures will rise as needs be, and there will relate request from structure clients for the establishment of cooling frameworks in homes and working environments, further expanding vitality utilization and surcharging the power circulation organize.

So as to handle the expanding power request, various answers for proficient vitality utilization, age of vitality from inexhaustible sources and new power dissemination plans of action for dynamic vitality control have been considered, and some of them have been even pushed by means of guidelines at the national and European dimension. For instance, in Spain, in August 2007, it was chosen to supplant all power meters so as to permit segregation on the hourly rates of vitality so that clients could tune their utilization example and contracts to the lower rates given by the utility at given occasions of the day.

Focusing on ecological maintainability, vitality proficiency and new power conveyance plans of action must be assessed. Besides, creative, vitality mindful, adaptable and client driven arrangements, ready to give intuitive vitality checking, savvy control and power request adjusting at the home, square and neighbor level are required. These arrangements will interconnect heritage proficient/buyer electronic gadgets with another age of vitality mindful white-merchandise in a typical system, where staggered hierarchic metering, control and booking will be connected, in view of intensity request, organize conditions and individual inclinations. Additionally, sustainable power source frameworks that will upgrade and coordinate, for instance, an inventive consolidated photovoltaic/sunlight based (CPS) framework can be utilized. These frameworks will give high temp water to white merchandise, (for example, a dishwasher and clothes washer) so as to firmly diminish the vitality utilization and the CO2 outflows at home by lessening/evacuating the warming operational cycles; electrical vitality from sustainable power sources (RES), which can be used at home and amid pinnacle periods, even nourished to the power organize in a turn around power age/circulation plan of action.

II. EXISTING SYSTEM

During the last years the challenge of smart city optimal energy management as attracted active interest by both academia and industry.The criticality of respective challenges as well as the multifaceted benefits highlight respective objective as a smart city cornerstone. Currently city energy management is quite inefficient since modern cities are responsible for 60% of energy and water consumption worldwide.

Additionally, greenhouse gas production accounted to cities reaches upto 70% of respective gas production worldwide. At the same time, estimations indicates that 70% of the population will be living in cities by 2050 which underpins the necessity to act rapidly in order to offer viable solutions for current and future generation.

DISADVANTAGE OF EXSISTING SYSTEM

- *Non automation Problems*

The biggest concern is Security in a smart grid system. Grid system uses some smart meters, which are not automated and provides communication between power provider and customer. Here some type of the smart meters can be easily violated and they may control the power supply of a single building or an entire neighbourhood.

- *Grid Volatility*

Smart Grid network has much intelligence at its edges; that is, at the entry point and at the end user's meter. But the grid has insufficient intelligence in the middle, governing the switching functions. This lack of integrated development makes the grid a volatile network. Engineering resources have been poured into power generation and consumer energy consumption, which are the edges of the network. However, if too many nodes are added to the network before developing the software intelligence to control it, the conditions will lead to a volatile smart grid.

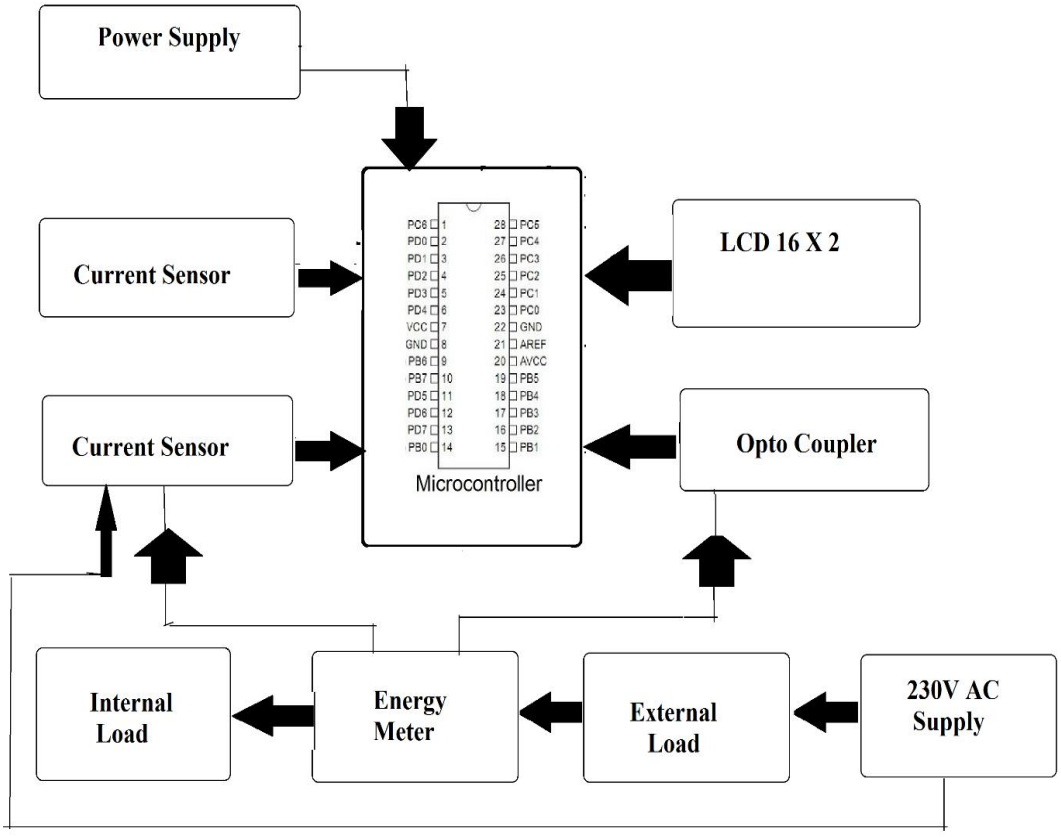

Figure.1.Block Diagram of Existing System

III. PROPOSED SYSTEM

- Integrate isolated technologies: smart grid enables better energy management
- Protective management of electrical network during emergency situation
- Better demand, supply/ demand response
- Better power quality
- Reduce carbon emissions
- Increased demand for energy: Requires more complex and critical solutions with better energy management
- Renewables Integration

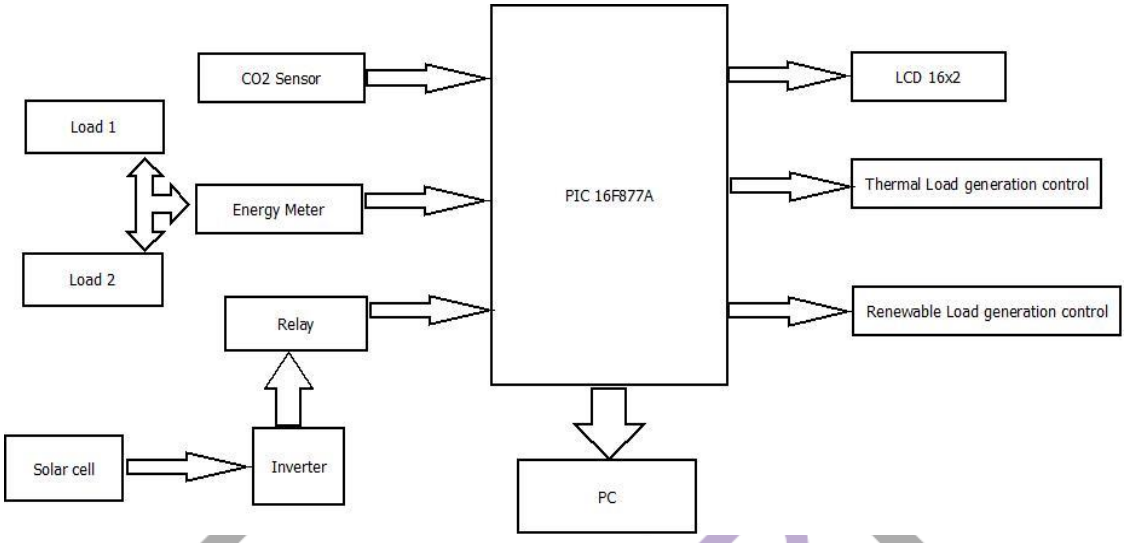

Figure.2.Block Diagram of Proposed System

METHODOLOGY AND DESCRIPTION

1. PIC 16F877A

The PIC microcontroller PIC16f877a is one of the most renowned microcontrollers in the industry. This controller is very convenient to use, the coding or programming of this controller is also easier. One of the main advantages is that it can be write-erase as many times as possible because it use FLASH memory technology. It has a total number of 40 pins and there are 33 pins for input and output. PIC16F877A is used in many pic microcontroller projects.

2. CO2 Sensor

A carbon dioxide sensor or CO_2 sensor is an instrument for the measurement of carbon dioxide gas. The most common principles for CO_2 sensors are infrared gas sensors (NDIR) and chemical gas sensors.

3. Energy Meter

A carbon dioxide sensor or CO_2 sensor is an instrument for the measurement of carbon dioxide gas. The most common principles for CO_2 sensors are infrared gas sensors (NDIR) and chemical gas sensors.

4. Relay

An electrical device, typically incorporating an electromagnet, which is activated by a current or signal in one circuit to open or close another circuit.

5. Thermal Load Generation Control

Load-frequency control (LFC) is a part of the Automatic Generation Control (AGC) in power systems, the aim of which is to maintain the system frequency and tie line flow at their scheduled values during normal period in an interconnected system.

6. Renewable Load Generation Control

In an electric power system, automatic generation control (AGC) is a system for adjusting the power output of multiple generators at different power plants, in response to changes in the load.

7. Inverter

A power inverter, or inverter, is an electronic device or circuitry that changes direct current (DC) to alternating current (AC).The input voltage, output voltage and frequency, and overall power handling depend on the design of the specific device or circuitry. The inverter does not produce any power; the power is provided by the DC source. A power inverter can be entirely electronic or may be a combination of mechanical effects (such as a rotary apparatus) and electronic circuitry. Static inverters do not use moving parts in the conversion process.

8. Solar Cell

A solar cell, or photovoltaic cell, is an electrical device that converts the energy of light directly into electricity by the photovoltaic effect, which is a physical and chemical phenomenon.[1] It is a form of photoelectric cell, defined as a device whose electrical characteristics, such as current, voltage, or resistance, vary when exposed to light. Individual solar cell devices can be combined to form modules, otherwise known as solar panels. In basic terms a single junction silicon solar cell can produce a maximum open-circuit voltage of approximately 0.5 to 0.6 volts.

Figure.3.Hardware

IV. CONCLUSION

All the hypothetical scenarios related to smart grids need evolution and development processes involving many aspects, which are today very interesting areas for study and research; in fact, the new challenges that have to be faced concern:

- Technical aspects: new criteria for electrical systems planning, design, control and management;
- Technological aspects: evolution of components, apparatus and systems (both hardware and software);
- Economical and policy-regulatory aspects: free markets, roles and responsibilities of all actors involved, connection rules, load shedding, generation curtailment, *etc.*;
- Social aspects: energy policies that are really sustainable, environmental impact reduction, energetic resources supplying diversification, the advantage of renewable development, the increase of power and service quality and lower costs for users (real competition).

A real cultural revolution has started, but as already said by Albert Einstein, “We can’t solve problems by using the same kind of thinking we used when we created them”.

ACKNOWLEDGMENT

The authors of this project would like to thank guide Assistant professor, Dr.M.Malarvizhi Ph.D and HOD, **Mr. J. CHANDRAMOHAN ME (Ph.D)** for guiding the entire project. The completion of this project would have been impossible without the involvement and encouragement of my guide Dr.M.Malarvizhi Ph.D.

REFERENCES

[1] European Community. *Gas and Electricity Market Statistics-Data 1990–2006*; Technical Report; European Community: Luxembourg, 2006.

[2] International Energy Agency Data Services. *Guide to Cost-Benefit Analysis of Investment Projects*; Technical Report; European Commission: Paris, France, 2002.

[3] TERNA S.P.A. *Annual Report 2005*; Technical Report; Terna: Roma, Italy, 2005.

[4] Invernizzi, S.; Capasso, W.; Lamedica, A.; Prudenzi, R.Probabilistic Processing of Survey.Collected Data in Residential Load Data for Hourly Demand Profile,Extimation.In Proceeding sofIEEE/TUA Athens Power Conference: "Planning, operation and control of Today's Electric Power Systems", Athens, Greece, 5–8 September 1993; pp. 866–870.

[5] European Commission. *European SmartGrids Technology Platform Vision and Strategy for Europe's Electricity Networks of the Future*; Technical Report; European Commission: Louxembourg, 2006.

[6] Capasso, W.; Grattieri, R.; Lamedica, A.; Prudenzi, R. A bottom-up approach to residential load modeling. *IEEE Trans. Power Syst.* 1994, *9*, 957–965.

[7] Rajan, C.Demand Side Management Using Expert System. In Proceedings of the Conference on Convergent Technologies for Asia-Pacific Region TENCON 2003, Bangalore, India, 15–17 October 2003.

[8] Miceli, R.; Genduso, F.; La Cascia, D.; Giaconia, C.; Viola, F.; Cosentino, V.; Romano, P.; Ippolito, M.G.; Zizzo, G.; Massaro, F.; Spataro, C.; Di Stefano, A.; Fiscelli, G. *Energy Management via Connected Household Appliances*; McGraw-Hill: New York, NY, USA, 2008.

[9] Romero, R.; Rocha, R.; Mantovani, M. Analysis of heuristic algorithms for the transportation model in static and multistage planning in network expansion system generation, transmission and distribution. *IEE Proc. Gener. Transm. Distrib.* 2003, *150*, 521–526.

[10] Miceli, R.; La Cascia, D. Environmental Benefits Through New Distributed on Site Control Actions Inside European Apartments. In Proceedings of the 2008 IEEE 2nd International Power and Energy Conference, Johor Baharu, Malaysia, 1–3 Dececember 2008; pp. 1649–1654, doi:10.1109/PECON.2008.4762743 cs:63049121342.

[11] IEEE Distribution Commitee. Planning for effective distribution. *IEEE Power Energy Mag.* 2003, *3*, 54–62.

[12] Newborough, M.; Augood, P. Demand-side management opportunities for the UK domestic sector. *IEE Proc. Gener. Transm. Distrib.* 1999, *146*, 283–293.

[13] Di Tommaso, A.O.; Favuzza, S.; Genduso, F.; Miceli, R.; RiccoGalluzzo, G. Development of Diagnostic Systems for the Fault Tolerant Operation of Micro-Grids. In Proceedings of the International Symposium on Power Electronics, Electrical Drives, Automation and Motion, Pisa, Italy, 14–16 June 2010; doi:10.1109/SPEEDAM.2010.5542262 cs:77956596092.

[14] Genduso, F.; Miceli, R.; Favuzza, S. A perspective on the future of distribution: Smart grids, state of the art, benefits and research plans. *Energy Power Eng.* 2013, *5*, 36–42, doi:10.4236/epe.2013.51005.