Reactive Power Compensation to Improve the Voltage Profile in Distribution System using Capacitor

Vishwanath S.T.[1], Farheen Taj S.N.[2], Chaitra S.V.[3], Yashoda M.S.[4], Rudresh S.J.[5]

[1,2,3,4]U.G. Students, [5]Assistant Professor
Department of Electrical and Electronics,
PES Institute of Technology and Management, Shivamogga Karnataka -577201

Abstract: **The Reactive power management play an important role in voltage profile of the distribution system. Adequate reactive power control solves power quality problems like flat voltage profile maintenance at all power distribution levels, improvement in power factor, distribution system efficiency and system stability. The Series and Shunt Capacitor compensation techniques are used to modify the natural electrical characteristics of the electric power system. Providing reactive shunt compensation with shunt-connected capacitors and reactors in optimal location is a well-established technique to get a better voltage profile in a distribution system. This paper presents performance analysis of shunt capacitors to improve the voltage profile and to reduce the losses. To demonstrate the reactive power compensation, a case study of 33 bus system is considered. The performance analysis of the change in voltage and reactive power with shunt compensation at the load side is done using the Power World Simulator software package. The outcome of this work helps in design and operational reactive power planning for the voltage and reactive power management.**

***Keywords*: Reactive power, Voltage Profile, Series compensation, Shunt compensation, optimal location of capacitors.**

1. Introduction

Reactive power management has become a most challenging task in power system operation and management. Some of the characteristics of the power systems and their loads can deteriorate the quality of the supply. The deterioration can be corrected by compensation that is by the supply or absorption of an appropriately variable quantity of the reactive power. However, most high voltage transmission systems are operating below their thermal rating due to such constraints as stability limits, on an alternating current power system voltage is controlled by managing the production and absorption of reactive power. A reactor or a capacitor stores the reactive power generated by the ac power source during a quarter of a cycle and returns the same power to the source in the next quarter cycle. In other words, the reactive power oscillates between the source and the reactor or capacitor at a frequency equal to twice the rated value. However, in nature, most of the loads are inductive loads absorbing reactive power and resulting in low lagging power factor. So, the compensation for these problems can be provided by means of connecting the capacitors of different ratings along the lines. However, the voltage at the receiving end in the transmission end is allowed to vary between the range of ±5% which further restricts the transfer of the reactive power. Load compensation is the management of the reactive power to improve the quality of the supply in ac power systems. The voltage can be controlled by providing reactive power control margin to modulate the supply needs through the following compensations as given below:

1. Shunt compensation.
2. Series compensation.
3. Dynamic compensator.

Any device which is connected in series or parallel with the load and which is capable of supplying reactive power demand to the load is called reactive power compensation device. Major industrial loads for ex: Induction furnace, Induction motors, etc., needs reactive power for their operation. Reactive power cannot deliver effective mechanical power output unlike its counter real power because the reactive power is utilized as active power which is achieved by providing reactive power compensator at load end.

This paper deals with the improvement in the voltage profile and reactive power compensation in 33 bus system taken for simulation purpose and the simulation of the system is done by using POWER WORLD SIMULATOR software packages. Here the performance evaluation of the Voltages profile, line losses are calculated before the compensation is given and all the tabulation are done as per the requirements. The shunt compensation is provided for 33 bus system in order to boost up the active power generation as well voltage profile at the bus. Simulations are done for different load. Hence the performance evaluation of the 33-bus system can be analyzed for the voltage profile and the reactive power generation in it, and the plot for the same can be plotted for the shunt compensation. By comparing the simulation results, the change in the voltage and the losses can be clearly analyzed. Also, by this method we can have the optimal location of the capacitor for the improvement of the voltage profile and reduced system losses with increased efficiency.

A. Need of Reactive power

- Reactive power is required to maintain the voltage profile and to meet the active power demand.
- Motor loads and other loads require the reactive power for excitation.
- When there is no enough reactive power, the voltage dips down and it is not possible to meet the power demand.

B. Effects of increased Reactive Power demand in the network

✓ Poor transmission efficiency.

✓ Poor voltage regulation.

✓ Low power factor.

✓ Need of large sized conductor.

✓ KVA Overrating of the system equipment.

Figure 1. Effect of reactive power on voltage collapse

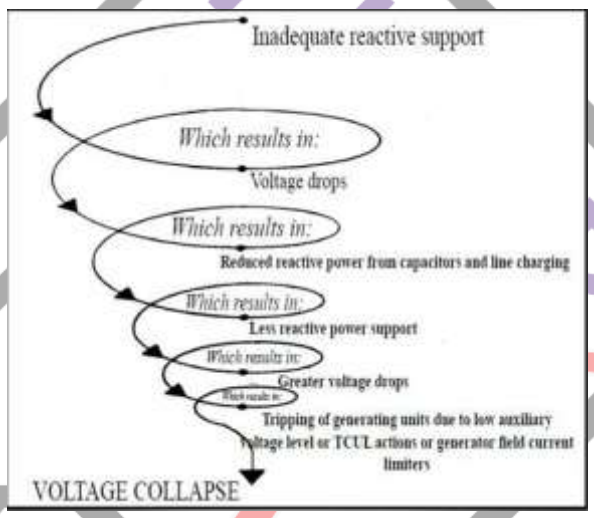

Figure 1 shows how the reactive power affects the voltage profile in the distribution systems. Inadequacy in the reactive power leads to the voltage drop to some extent and if continues in the same state and the tripping is not achieved properly in the system connected then the generator will go out of step and finally it leads to the blackout in the power system. Hence in this type of conditions the compensation is very much essential.

C. Compensating Techniques

There are many types of the compensating Techniques available in the practice like static VAR compensation, series compensation, shunt compensation, synchronous condensers, etc., but in this paper, we are giving more importance to the shunt capacitor compensation technique and they are discussed in detail as given below.

Shunt compensation: Shunt capacitors are connected in parallel to feed the reactive power and are used mainly for voltage profile improvement. These are used across an inductive load so as to supply the part of thereactive VAR's required by the loads so that the reactive VAR's transmitted across the lines are reduced, thereby the voltage across the load is maintained. Shunt capacitor banks can be connected in parallel to the load bus.

The advantages of compensations stated here can be given as follows:

- Better efficiency of the power generation, transmission and distribution.
- Improvement in the voltage profile.
- Reduced KVAR demand.
- Higher load capability.
- Reduced system losses.

Table1:33 Bus system data

Sending node	Receiving node	Active Power Rec. node KW	Reactive Power Rec. node KVAR	Resistance ohms	Reactance ohms
1	2	100	60	0.0922	0.0470
2	3	90	40	0.4930	0.251 1
3	4	120	80	0.3660	0.1 864
4	5	60	30	0.3811	0.1941
5	6	60	20	0.8190	0.7070
6	7	200	100	0.1872	0.6188
7	8	200	100	1.7114	1.2351
8	9	60	20	1.0300	0.7400
9	10	60	20	1.0440	0.7400
10	11	45	30	0.1966	0.0650
11	12	60	35	0.3744	0.1238
12	13	60	35	1.4680	1.1550
13	14	120	80	0.5416	0.7129
14	15	60	10	0.5910	0.5260
15	16	60	20	0.7463	0.5450
16	17	60	20	1.2890	1.7210
17	18	90	40	0.7320	0.5740
2	19	90	40	0.1640	0.1565
19	20	90	40	1.5042	1.3554
20	21	90	40	0.4095	0.4784
21	22	90	40	0.7089	0.9373
3	23	90	50	0.4512	0.3083
23	24	420	200	0.8980	0.7091
24	25	420	200	0.8960	0.7011
5	26	60	25	0.2030	0.1034
26	27	60	25	0.2842	0.1447
27	28	60	20	1.0590	0.9337
28	29	120	70	0.8042	0.7006
29	30	200	600	0.5075	0.2585
30	31	150	70	0.9744	0.9630
31	32	210	100	0.3105	0.3619
32	33	60	40	0.3410	0.5302

2. Simulation

The simulation in this paper is carried out by using the **Power World Simulator Software Package.** The 33 bus system is drawn using the package and the data considered for the study like generator parameters and also the load parameters are given in the table, they are given as the input to generator and also the load, then the 33 bus system is simulated before giving the compensation to it and the values of voltage, line losses are tabulated as shown in table no. .after this compensator is added to the bus having least voltage, then the output is tabulated. Similarly, for different loading conditions the compensation is given and the readings are tabulated, parallel to tabulation the graphs for the same are plotted as shown.

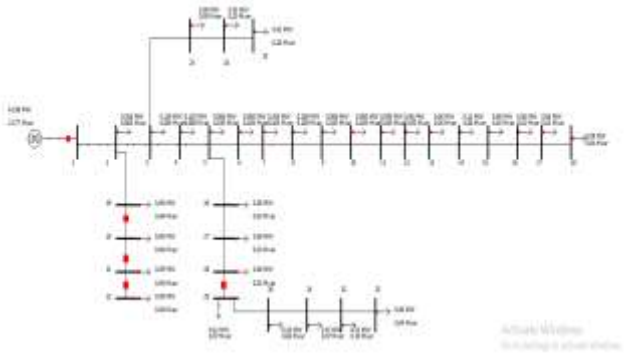

Figure 5. 33 bus system before compensation.

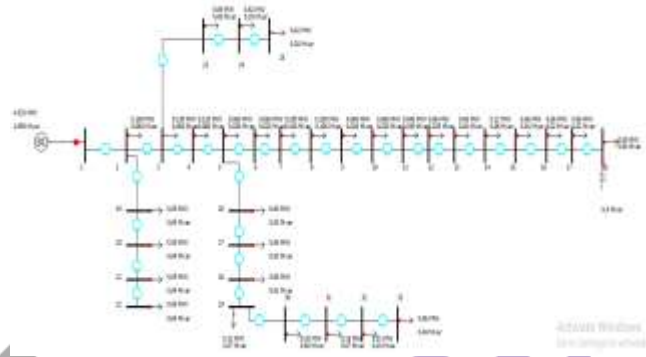

Figure 6. 33 bus system with Shunt Compensation

3. Simulation Results

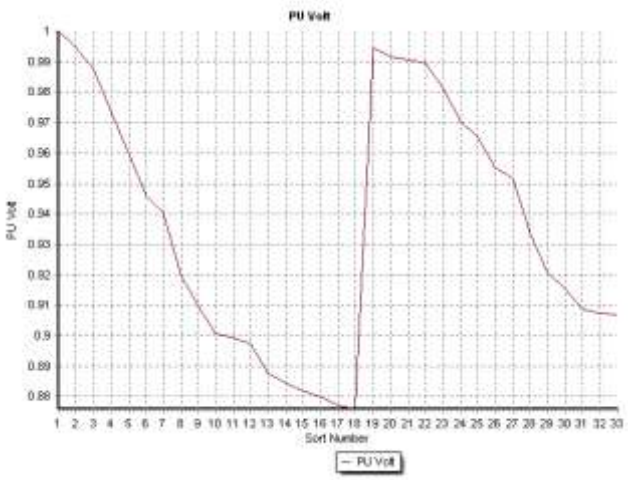

Figure 7. Plot of Bus records without compensation

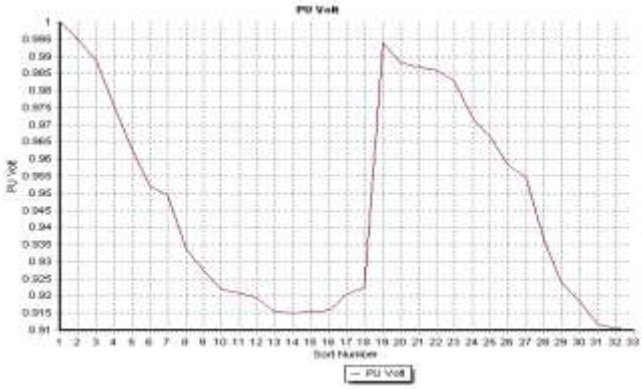

Figure 8. Plot of Bus records with compensation

Table 4: Comparison of Voltage profile

Bus Number	Before compensation	After compensation
	PU Volt	PU Volt
1.	1.00000	1.00000
2.	0.99479	0.99490
3.	0.98732	0.98862
4.	0.97345	0.97558
5.	0.95966	0.96264
6.	0.94592	0.95202
7.	0.94055	0.94937
8.	0.91947	0.93388
9.	0.90975	0.92756
10.	0.90073	0.92199
11.	0.89940	0.92097
12.	0.89706	0.91924
13.	0.88765	0.91524
14.	0.88420	0.91506
15.	0.88205	0.9538
16.	0.87996	0.91588
17.	0.87689	0.92069
18.	0.87596	0.92250
19.	0.99430	0.99401
20.	0.99174	0.98801
21.	0.99056	0.98683
22.	0.98950	0.98577
23.	0.98143	0.98273
24.	0.97049	0.97181
25.	0.96505	0.96638
26.	0.95548	0.95847
27.	0.95148	0.95447
28.	0.93364	0.93663
29.	0.92083	0.92383
30.	0.91529	0.91829

31.	0.90883	0.91184
32.	0.90741	0.91043
33.	0.90697	0.90999

The data for the 33-bus system is given in table 1 accordingly the 33-bus system is drawn using POWER WORLD SIMULATOR. Figure 5 represents the 33-bus system before compensation. When it is run through the power world simulator software, we get the volt (pu) as given in tabular column 4 (before compensation). The table clearly gives us the information that bus 11 to 18 have low voltage profile which needs to be improved. Figure 7 gives us the information about how the voltage is varied with respect to bus number and it is clearly seen that bus 11 to 18 less voltage compared to other busses. The losses before compensation is identified as 0.092MVAR which is mentioned in table 5.

To improve the voltage profile and to decrease the losses it is important to place the capacitor at the suitable bus, this suitable bus is identified as the busses where the voltage is very less than the margin voltage value i.e., from bus 11 to 18.

The 33-bus system with shunt compensation is drawn as shown in figure 6. So, shunt capacitance with 20% of generated MVAR is placed every bus to check the voltage improvement and reduction in losses. Finally, at bus 18 it is observed voltage profile has been improved and losses are reduced. The voltage (pu) value are shown in table 4 (after compensation) and from figure 8 it is clearly observed that voltage has been improved from bus 11 to 18. From table 5 we can infer that losses are reduced to 0.08MVAR after placing shunt capacitor at suitable bus.

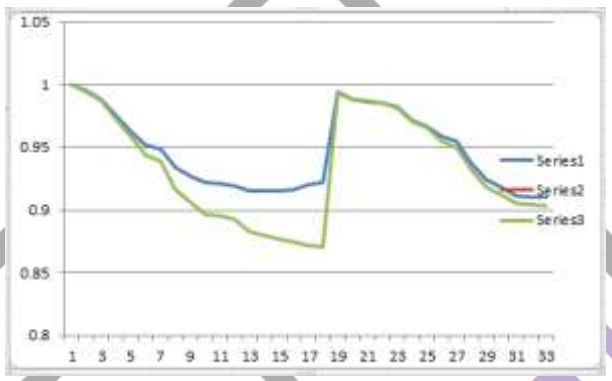

Figure 8. Comparison of Voltage Profile

As shown in figure 8, it is the comparison between 33 bus system with compensation without compensation. The green line shows the bus system without compensation and we can observe voltage is decreased, similarly blue line shows the improved voltage profile at bus 11 to 18.

Table 5: Comparison of losses

Capacitor value	Losses without capacitor		Losses with capacitor	
	MW	MVAR	MW	MVAR
0.2392	1.37	0.092	1.36	0.08
0.4784	1.37	0.092	1.35	0.078

Table no.4 and 5 gives the comparison between voltage profile and line losses before and after placing capacitor. Before the capacitor placement the voltage profile was less and line losses are more, after capacitor placement the voltage profile has been improved and line losses are reduced to some extent. From this tables we can infer that the effective compensation by using the capacitors at the distribution system can lead to the improved voltage profile and line losses in the transmission lines.

4. ECONOMIC ANALYSIS

To estimate the economic analysis of the 33-bus system we have, total generated MW and MVAR without capacitor is 4.545 and 2.392 respectively. Total load MW and MVAR is 3.715 and 2.3 respectively.

MVAR Losses of the system without capacitor is calculated as shown below,

=>2.392-2.3=0.092 MVAR

By placing the 20 % of the capacitor at the bus number 18. The value of 20 % of the capacitor is 0.4784 MVAR.
By placing the capacitor of 0.4784 MVAR at the bus 18 we get, generated MVAR as,

=> 2.19+0.19 = 2.38

Therefore, losses with capacitor => 2.38-2.3=0.08 MVAR
Percentage (%) of loss reduction =>

$$\frac{Ploss(without\ capacitor) - Ploss(with\ capacitor)}{Ploss(without\ capacitor)}$$

=> $\frac{0.092-0.08}{0.092}$
=> 13 %.

Cost of capacitor:

Cost of 1 KVAR capacitor =250Rs.
Value of 20%MVAR=0.4784MVAR
=0.4784*1000
=478.4KVAR.
Cost of 478.4 KVAR capacitor = 478.4*250
=119,600Rs.
Transportation and Labor charge for capacitor bank placement =20,000Rs.
Investment = 119,600+20,000
=139,600Rs.
Cost of per unit power = 4.00 Rs.
Energy saved by using capacitor = 0.092MVAR-0.08MVAR
= 0.012MVAR
=>12KVAR.
Cost energy saving of per year = 12*365*24*4 =420,480Rs.
Annual cost saving = cost saving per year – investment
= 420,480-139,600 =280,880Rs.

CONCLUSION

A capacitor is said to be the generator of the reactive power. When a capacitor is connected across the load bus, it reduces the reactive power demand from the line and boosts the voltage profile of the system. Through this paper, we conclude that the voltage profile can be improved and losses can be reduced by providing a reactive power compensation in distribution system using shunt capacitor. This is done for only single capacitor connected at bus no.18, and results of that are tabulated in the paper, further the simulation can be extended by connecting the capacitors at all other buses depending upon the voltage profile of the buses and Hence we can have the optimal location of the capacitor based on the simulation results and the cost of operation can be reduced. Shunt capacitive arrangement reduces the total active and reactive power loss. From this paper we infer that the compensation is more effective for economical operation of the system with increased efficiency.

REFERENCES

[1] "Shunt Versus Series Compensation in the improvement of lower system performances", Irinijila Kranti kiran[1], jaya laxmi[2], IEEE, Dindugal valume -2 2011.

[2] "Reactive Power Compensation using 12 MVA capacitor bank 132/33 KV Distribution Substation", Yogesh U Sanbale[1], Vishal U Mundavare[2], Pravin G pisote[3], Vishal K Vaidya[4], IEEE, SVIT Chincholli, nashik, volume 3 May 2017.

[3] "Reactive Power Compensation by power capacitor method", Faizal M, Waleed raza m, Khan S and Faizullah, department of electrical engineering, balochistan university of information technology, Pakistan, IEEE, APRIL 2018.

[4] "Maximum loss reduction by optimal placement of capacitors on a distribution system", B V Vibhutte, Dr. H.P. Inamdar, and S.A Deokar. IEEE 2006.