Review on IoT Based Soil Analysis for Betterment of Agriculture Productivity

[1]Sayali S. Deore, [2]Gayatri S. Kalunge, [3]Archana R. Pawar, [4]Punam K. Shimpi, [5]Prof. M.V. Korade

[1,2,3,4]UG Students, [5]Assistant Professor
Computer Engineering Department
Sandip Institute of Engineering & Management, Nashik-422013, India

***Abstract*: Indian economy is mainly depends on agriculture and agriculture productivity depends on soil fertility but the current approach of soil testing is time consuming because soil samples tested in laboratory situated in cities which takes weeks or a month. Also the lack of knowledge of farmers regarding the soil may cause decrease in agriculture productivity so there is a need to develop the system which can be made available to the farmer which helps the farmers to cultivate and produce proper crop by recommending appropriate fertilizer and crop suitable. In this paper, a system is proposed that measures pH of soil using pH sensor and nutrients present in the soil by using various sensors. It will also suggest farmers which fertilizers and crop is suitable for farm. This system will help to increase the agriculture productivity and financial status of the farmers.**

***Index Terms*: Fertilizer and Crop Recommendation, Soil Analysis, Arduino, pH sensor, Soil Moisture Sensor.**

I. INTRODUCTION4 YD K

Agriculture products depends on soil, rain, weather etc. Soil sample is analyzed to determine the pH level, nutrients, moisture level but the major problem is that the farmers don't have sufficient knowledge about soil. So there is a need of soil analysis. Our system will be used for soil analysis and based on soil analysis report, fertilizer will be recommended to the user. Fertilizer will be recommended according to deficiency of nutrients present in soil. Our system will help farmers for better crop yields which in turn maximize the profit. The proposed system will sense the data using sensors and according to that the result will be generated which helps the farmers to increase the agriculture productivity.

II. LITERATURE REVIEW

Agriculture sector is the backbone of Indian economy. The major challenge in agriculture is to promote the cultivation in the farm and deliver it to the end consumers with the best possible quality. In order to achieve ever in- creasing quantity and quality demands, technological innovations must be explored. The traditional methodologies can be integrated with latest technologies as Internet of Things (IoT) and Wireless Sensor networks (WSNs) to enable various applications in Digital Agriculture Domain. Rice is the most important food crop of India. Over 90 percent of World's rice is produced and consumed in Asia-Pacific region. It has served as a host of number of diseases and insect-pests. The major ones causing economic losses in any rice growing country are: bacterial, fungal and viral diseases. Temperature and type of the soil are the major components to be considered for optimal growth. Based on these components, a system is proposed that mainly focuses on the methods to predict the various diseases a ecting the crop growth and to inform the farmer, the ratio of pesticides to be used to reduce the risk caused by excessive usage of pesticides both on human health and environment. This system uses Supervised Machine Learning Algorithm such as C4.5 for classification analysis.[1]This work is to construct a model for testing the soil fertility. It also suggests the crop which has to be planted depending upon the value obtained from the sensor. It also provides the regional wise information about the crop in the form of graph. We have farmer chat where the farmers can share and get idea from the expert by registering in this application. It also suggests the fertilizer which has to be added to the soil in order to increase the crop productivity. It helps the farmer to analyze the fertility of their yard and plant the better crop to increase their productivity and profit. It also provides the information about the fertilizer to be added in the soil and also provide the information about the nearby fertilizer shop.[2] Agriculture plays a crucial role in the life of an economy. It is the backbone for developing countries like India as more than 70 percent of population depends on agriculture. To increase crop production many factors are responsible like soil, weather, rain, fertilizers and pesticides. We have used soil parameters to increase crop production because it is an essential key factor of agriculture. To maintain nutrient levels in the soil in case of deficiency, fertilizers are added to soil. The common problem existing among the Indian farmers is that they choose approximate amount of fertilizers and add them manually. Excess or insufficient addition of fertilizer can harm the plant life and reduce the yield. This paper provides review of various data mining techniques used on agriculture soil dataset for fertilizerrecommendation. Mainly I focused on various soil parameters like Fe, S, Zn, Cu, N and Ph value etc. In this survey, we also describe some Agriculture problems that can be solved by using data mining techniques.[3] Data Mining is an emerging research field in crop yield analysis. Yield prediction is a very important issue in agricultural. Any farmer is interested in knowing how much yield he is about to expect. Analyze the various related attributes like location, pH value from which alkalinity of the soil is determined. Along with it, percentage of nutrients like Nitrogen (N), Phosphorous(P), and Potassium (K) Location is used along with the use of third-party applications like APIs for weather and temperature, type of soil, nutrient value of the soil in that region, amount of rainfall in the region, soil composition an be determined. All these attributes of data will be analyzed, train the data with various suitable machine learning algorithms for creating a model. The system comes with a model to be precise and accurate in predicting

crop yield and deliver the end user with proper recommendations about required fertilizer ratio based on atmospheric and soil parameters of the land which enhance to increase the crop yield and increase farmer revenue.[4]

III. Proposed System

In this system, Soil analysis is done using IoT. Figure 1 represents the architecture of Soil Based Fertilizer and Crop Recommendation System. In this system user will first login to the system it is a existing user. Otherwise, user have to register to the system providing name, Contact details, land information, crop details etc. Then analysis of soil is done through sensors. Sensors will measure the nutrients, pH value, Moisture level present in the soil. This sensed data will be stored in the database. Fertilizer and crop will be recommended using nutrient status table, pH value, Moisture level stored in the database. By comparing values of nutrients with the table classification will be done. Classification will be done using Naive Bayes algorithm. Fertilizer will be recommended to the user through the mobile application. Our system uses Data centric i.e. Client Server architecture. Clients and server connected through the cloud. Continuous network connectivity is required for the system.

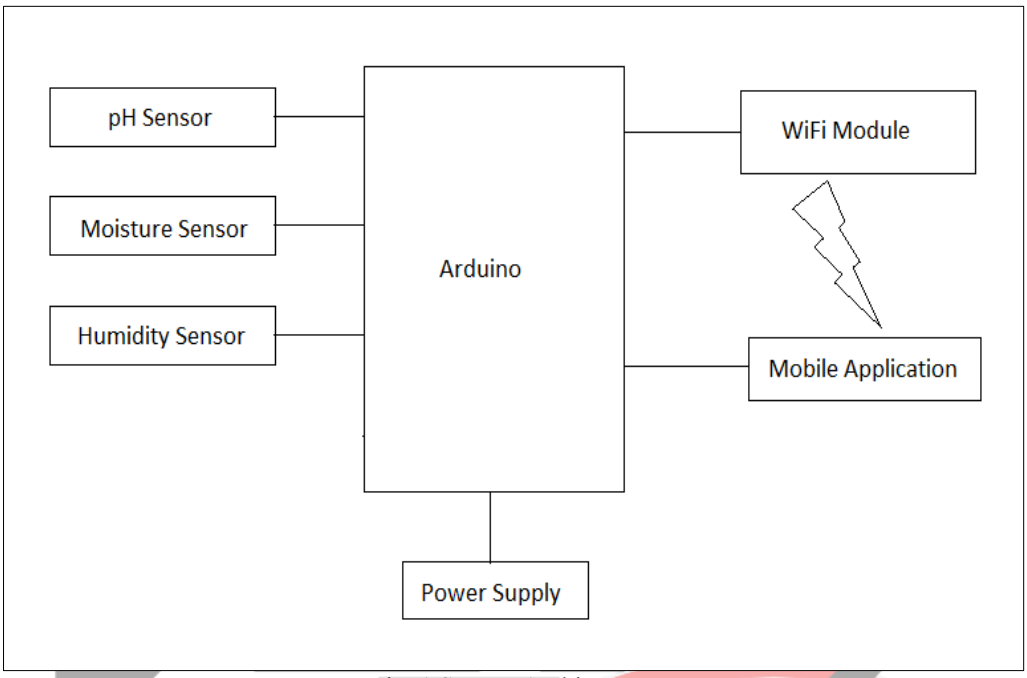

Fig. 1 System Architecture

IV. Mathematical Model

Input: Soil Sample
Output: Recommended fertilizer and crop.
Mathematical formulation:
Let S be a system such that, S={I, F,O}

I= Set of Input
I= I1, I2
I1= Soil Report
I2= Soil Sample
F= Set of Function
F= F1, F2
F1= Analysis of Soil using Sensors
F2= Soil Test Report Analysis
O= Set of Output
O= O1,O2
O1= Fertilizer Recommendation
O2= Crop Recommendation

Success Conditions: To get proper fertilizer and crop recommendation according to soil sample.
Failure Conditions: No internet connection

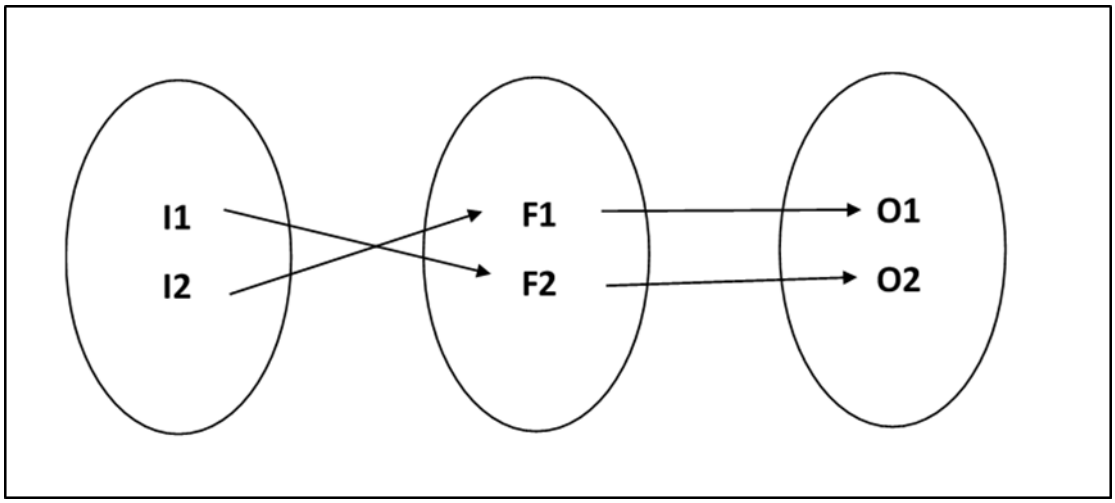

Fig.2 Mathematical Model

V. Requirement Specification

A. Hardware Requirements:

Wifi Module:

Fig.3 WiFi Module

The Arduino Uno WiFi is an Arduino Uno with an integrated WiFi module. The board is based on the ATmega328P with an ESP8266 WiFi Module integrated. The ESP8266 WiFi Module is a selfcontained SoC with integrated TCP/IP protocol stack that can give access to your WiFi network (or the device can act as an access point).

Arduino:

Fig.4 Arduino

The Arduino board is connected to a computer via USB, where it connects with the Arduino development environment (IDE). The user writes the Arduino code in the IDE, then uploads it to the microcontroller which executes the code, interacting with inputs and outputs such as sensors, motors, and lights. The Arduino Uno board is a microcontroller based on the ATmega328. It has 14 digital input/output pins in which 6 can be used as PWM outputs, a 16 MHz ceramic resonator, an ICSP header, a USB connection, 6 analog inputs, a power jack and a reset button. This contains all the required support needed for microcontroller.

pH Sensor:

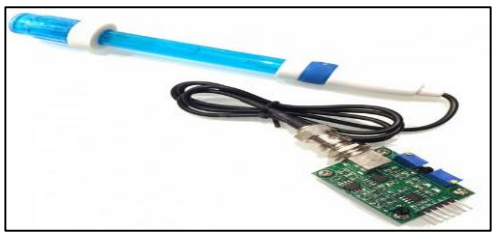

Fig.5 pH Sensor

PH meter. PH meter, electric device used to measure hydrogen-ion activity (acidity or alkalinity) in solution. Fundamentally, a pH meter consists of a voltmeter attached to a pH-responsive electrode and a reference (unvarying) electrode. When the two electrodes are immersed in a solution, they act as a battery.

Moisture Sensor:

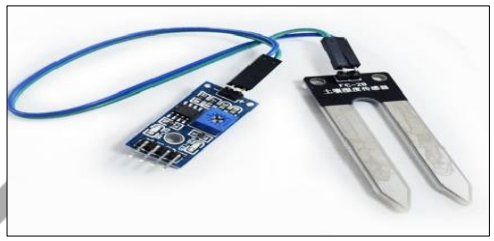

Fig.6 Moisture Sensor

Soil moisture sensors measure the volumetric water content in soil. Reflected microwave radiation is affected by the soil moisture and is used for remote sensing in hydrology and agriculture. Portable probe instruments can be used by farmers or gardeners.

B. Software Requirements:

Language: ANSI C
Arduino 1.8. IDE
Android studio

VI. ADVANTAGES

Our proposed system will be in the simple language. Farmer need not take efforts of visiting laboratory for soil testing. Proposed system will give accurate result in less time.

VII. ACKNOWLEDGEMENTS

I would like to take this opportunity to thank my internal guideProf. M. V. Korade for giving me all the help and guidance I needed. I am really grateful to them for their kind support. Their valuable suggestions were very helpful.
I am also grateful to Prof. (Dr.) K. C. Nalavade Head of Computer Engineering Department, Sandip Institute of Engineering & Management for her indispensable support, suggestions.

CONCLUSION

A system is implemented using various IoT components like sensors and standard devices like smartphone. By using this system appropriate crop and fertilizers recommendation will be given to the farmers. It will save the time and increase the agriculture productivity and improve the financial status of farmers.
Future work may include availability of suggested fertilizers to purchase online from the app, weather estimation about the whole cultivation period of the crop, facility to purchase seedlings online whose suggestions are provided by thetesting tool, labour providence which will thereby provide employability to the unemployed in the agriculture industry.

References

[1] T.Satish1 T. Bhavani and Shameena Begum ”Agriculture Productivity Enhancement System using IOT” International Journal of Theoretical and Applied Mechanics.ISSN Research India Publications0973-6085 Volume 12, Number 3 (2017) pp. 543-554.

[2] P. S. Vijayabaskar ; R. Sreemathi ; E. Keertanaa “Crop prediction using predictive analytics” (2017)

[3] *Jignasha M. Jethva, Nikhil Gondaliya, Vinita Shah,”A Review on Data Mining Tech-niques for Fertilizer Recommendation”https://www.researchgate.net/profile/Shabana_Urooj/publication* .

[4] S. Bhanumathi ; M. Vineeth ; N. Rohit “Crop Yield Prediction and Effcient use of Fertilizers” (2019)

[5] KomalBodake, RutujaGhate, Himanshi Doshi, Priyanka Jadhav and BalasahebTarle"Soil based Fertilizer Recommendation System using Internet of Things" June 2018.

[6] Baranwal N, Baranwal T. Development of IoT based smart security and monitoring devices for agriculture. IEEE 6th international conference cloud system and Big data Engineering; 2016. p. 14–5.

[7] R. Agrawal and R. Srikant,"Fast algorithms for mining association rules in large databases," in Proc. 20th Int. Conf. Very Large Data Bases, 1994, pp. 487–499.

[8] https://store.arduino.cc/usa/arduino-uno-rev