Effect of brand on customer loyalty - Study on the Post Office Savings Bank of Kerala circle

Dr. Suma Mathew

Associate Professor
St. Joseph's Business School
St. Joseph's College of Engineering and Technology, Palai
Choondacherry P.O. Kottayam (District) Kerala State

***Abstract*: The brand name has a direct and positive association with perceived quality of services and customer satisfaction. Establishments should have a strong and powerful brand strategy and should safeguard it. Organizations should achieve significant competitive advantage, implement marketing techniques, and relationships for strengthening the brand value. The brand name is the useful concept of this model. Finally, customer satisfaction and perceived quality will lead to customer loyalty.**

***Keywords*: Brand Value, Perceived Quality, Customer Satisfaction, Customer Loyalty**

1. INTRODUCTION

In India, the service sector has got greater economic importance over the past decade and has the largest share in GDP. Banking and other financial services, being an important part of service sector, are facing critical challenges to compete with the international players while satisfying customers. Banking plays a crucial role in the development of the economy of any nation. Adequate banking facilities are necessary for the development of industry, trade, commerce, transport, and agriculture. Banking institutions organize savings and use them for productive purposes. Financial inclusion is no longer a fringe subject. It is now recognized as an important part of the mainstream consideration on economic development based on country leadership. As banking services are in the nature of public good, it is essential that availability of banking and payment services are offered to the entire population without discrimination. India Post is a reliable establishment having proper reach nationwide with wide line up of financial instruments. India Post has about 1, 54,965 post offices (as on 31.03.2017) of which 1,39,067 (89.74%) are in rural areas. There is one post office for every 7,753 people in India. India Post also has 2,49,000 agents in the rural area. About 2.2 crore people, already receive their National Rural Employment Guarantee Act (NREGA) payments by post offices. After State Bank of India(SBI), India Post has the largest deposits valued at ₹6 lakh crore. The present study is an attempt to analyze the spatial and temporal distribution of financial inclusion and contemplate steps for further improvements of improving access of finance. The results indicate low preference for postal services among the more prosperous states. To make post office savings scheme aware as well as to enhance customer loyalty the brand name and perceived quality of service should be improved. Studies in the area of branding states that there exists positive effect of customer satisfaction on perceived quality and customer loyalty but perceived quality has no effect on customer loyalty. Satisfaction has a significant effect on trust, reliability and loyalty and perceptual value has an effect on customer satisfaction and loyalty. The study details out the various aspects of Brand effect on customer loyalty towards Post Office Savings Bank, a financial service offered by the Department of Posts.

The study specifies about customer satisfaction, loyalty, perceived quality and brand value in relation to customer loyalty. The study will inculcate the insights of common people involved in branding of banking services offered by the postal service of India giving focus to the process of brand loyalty from the perspective of Department of Posts.

Brands are valid symbols which make companies honest about their products or services and take notice of customers' complaints. The importance of credit is the fact that incomplete and uneven information can result in customer uncertainty about the characteristic of the product. Customer uncertainty may occur after data collection. This leads to consumer's perceived risk (Erdem and Swait, 2004)

Brand reliability will decrease the perceived risk because it increases the customer's trust about the firm's claims. Credit and reliability will reduce the costs of information because customers may use valid and reliable brand as a source of knowledge to reduce the cost of data collecting and data processing. It is important to understand that the major service brand and its related organization have the same meaning in the field of service. As a result, we can say that brands will have a wider impression in the area of services.

2. METHODOLOGY

This study explores the ways the POSB contributed to the formation of Banking system in the mid nineteenth, twentieth and twenty-first century. In particular, this is a study of how the POSB plays an instrumental role in transforming the Economy of the state and the Nation by uplifting the monetary requirements of rural population. Despite of attaining a wide area of coverage and infrastructure facility, are they delivering the quality of service as compared to the other nationalized banks? Do they possess the brand name and customer loyalty as for twenty-first century? Are the customers satisfied by the processing system? Though various services are offered by Post Office how the savings bank service (if offered efficiently) can generate profit for the organization. This study is meant to know about the satisfaction to the customers from the various service schemes.

The main purpose of this study is to investigate the effect of Brand Name of Post Office Savings Bank, its Service Schemes and Basic Amenities on Perceived Quality, Customer Satisfaction and on Customer loyalty.
The brand name is the useful concept of this model. The brand name has a direct and positive association with perceived quality of services and customer satisfaction. Therefore, establishments should have a strong and powerful brand strategy and should safeguard it. Organizations should achieve significant competitive advantage, implement marketing techniques, and relationships for strengthening the brand value. Finally, customer satisfaction and perceived quality will lead to customer loyalty.
The method used in the study is exploratory as it utilizes scoring of the variables. The collected data contains both the qualitative and quantitative data. Accordingly, the study uses both qualitative and quantitative techniques for the analysis of data. The statistical analysis comprised of two stages. The first stage examined the descriptive statistics of the measurement items and assessed the reliability and validity of the measure applied in this study. The second stage tested the proposed research model and this involves assessing the contributions and significance of the manifest variables path coefficients (Grimm, 2000).

Confirmatory factor analysis was used to explore the relationships between independent and moderating variables and to describe the construct of the theoretical frame work. This was done using the software AMOS 18 (Arbuckle, 2006 a). In the confirmatory factor analysis, first a theoretically supported model was developed for each factor, a path diagram of casual relationships was constructed and, the parameter estimated in the model were examined based on the goodness of fit measures available in AMOS output (Byrnes, 2006).

By using SEM, it is a common practice to use a variety of indices to measure the model fit. In addition to the ratio of the $\chi 2$ statistic to its degree of freedom, with a value less than 5 indicating acceptable fit, researchers recommended a handful of fit indices to assess model fit (Kline, 2005). These are the Goodness of Fit Index (GFI), Adjusted goodness of fit (AGFI), Normed Fit Index (NFI), Standardized Root Mean Residual (SRMR), and the Comparative Fit Index (CFI). The root mean squared error of approximation (RMSEA) is selected as a measure (Gignac, 2006).
The measures of "goodness of fit' followed in this research are:

Absolute fit measures
Likelihood ratio Chi-square statistic (p): usually greater than 0.05 or 0.01 is the level of acceptable fit.
Goodness of fit index (GFI): higher values closure to 1.0, indicates better fit.
Root mean square error of approximation (RMSEA): values ranging from 0.05 to 0.08 are acceptable.
Root mean square residual: smaller values are better.

Incremental fit measures
Tuker-Lewis Index (TLI): A recommended value of TLI is 0.09 or greater. The value closure to 1.0 indicates perfect fit.
Normal fit Index (NFI): A recommended value of NFI is 0.09 or greater. The value closure to 1.0 indicates perfect fit.
Adjusted goodness –of –fit index (AGFI): A recommended value of AGFI is 0.09 or greater. The value closure to 1.0 indicates perfect fit.

Parsimonious fit measures
Normal Chi-square (CMIN/DF): Lower limit 1.0 and upper limit 2.0/3.0
Parsimonious goodness-of-fit index (PGFI): the value closure to 1.0 indicates perfect fit (Thompson, 2004)

Considering the above values, a conclusion was reached about the final model of each factor and their relationships. Correlation was then exercised to explore the relationships among the factors of independent and moderating variables. Moreover, multiple regressions were applied to investigate the association between independent and moderating factors (Cohen et.al, 2003)

2.1 K-S test for Normality
It is very essential to test the normality of the data before conducting any statistical analysis as the statistical procedures and tests differs for normal data and non-normal data. In other words, we use parametric test procedure for normal and distribution free methods for non-normal data. To test normality, we use Kolmogorov-Smirnov test under which we test the hypothesis
H0: the given data is normal
H1: the given data is non-normal.
If p value is less than 0.05, we reject the normality assumption, and if p value is greater than 0.05 the data is normal.
Accordingly, first we conduct the K-S test and the following table gives the result of the K-S test. The test indicates that the data is normal.

Table 1 K-S test for Normality

Variable	*N*	*Mean*	*Std. Deviation*	*Kolmogorov-Smirnov Z*	*Asymp. Sig. (2-tailed)*
Level of awareness regarding post office savings schemes	846	38.76	14.39	0.971	0.166
Brand Name	846	35.11	9.82	1.475	0.070
Perceived Quality	846	34.44	9.51	1.249	0.106
Satisfaction	846	34.85	7.60	0.103	0.459
Loyalty	846	38.60	7.32	1.045	0.148
Satisfaction level of basic amenities	846	22.12	6.15	0.449	0.327

2.2 Reliabillity

The reliability of the questionnaire is also evaluated using Cronbach's alpha. The following table gives the initial Cronbach's alpha for each of the construct considered. Result shows that most of the constructs has reliability greater than 0.7 so we proceed for further analysis.

Table 2 Reliabillity

Variables	*Cronbach's Alpha*	*N of Items*
Level of awareness regarding post office savings schemes	0.917	9
Brand Name	0.922	8
Perceived Quality	0.942	8
Satisfaction	0.872	8
Loyalty	0.882	8
Satisfaction level of basic amenities	0.902	8

2.3 Structural equation modeling (SEM)

Structural equation modeling (SEM) is a statistical technique that takes a confirmatory approach to the analysis of a structural theory bearing on some phenomenon. SEM conveys two important aspects of the procedures: a) causal process under study is represented by a series of structural (regression) equations, and b) these structural relationships can be modelled to facilitate a clearer conceptualization of the theory under study. The hypothesized model is statistically tested simultaneously to examine its consistency with the data through goodness of fit measures

It allows the examination of a series of dependence relationships between exogenous (independent) and endogenous (dependent) variables simultaneously. An exogenous variable is one whose variability is assumed to be determined by causes outside causal model and an endogenous variable, is the one whose variation is explained by exogenous and other endogenous variables in the causal model.

Another classification of variables is latent variables and manifest variables (observed). Latent is a hypothesized and unobserved concept that can only be approximated by observable or measurable variables which are called manifest variables.

SEM consists of two parts: measurement model and the structural equation model.

Measurement model specifies how the latent variables are represented through observed variables and its measurement properties. The structural equation model is a comprehensive model that depicts the pattern of relationships among independent and dependent variables. It incorporates the strengths of multiple regression analysis, factor analysis and multivariate ANOVA.

The structural equation modeling is done using the two-stage analysis in which the measurement model is first estimated and then the measurement model is kept fixed in the next step in which the structural model is estimated. The rationale for this approach is that accurate representation of the reliability of the indicators is best accomplished in two steps to avoid interaction of structural and measurement models.

Confirmatory factor analysis (CFA) is a type of structural equation modelling (SEM), which deals specifically with measurement models, that is relationship between observed measures or indicators (eg. Test items, test scores etc) and the latent variables or factors. A fundamental feature of CFA is its hypothesis –driven nature. In CFA, the researcher specifies the number of factors and the pattern of indicator factor loading in advance, thus the researcher must have a firm prior sense, based on past evidence and theory of the factors that exist in the data. CFA is used for four major purposes 1) psychometric evaluation of measures

(questionnaires) 2) construct validation 3) testing method effects and 4) testing measurement in variance (across groups or population).

In social research works, researchers need to have measures with good reliability and validity that are appropriate for use across diverse populations. Development of psychometrically sound measures is an expensive and time consuming process, and CFA be one step in the development of process, because researchers often do not have the time or resources to develop a new measure, they may need to use existing measures. In addition to savings in time and costs, using existing measures also helps to make research findings comparable across studies when the same measure is used in more than one study. However, when using existing measure, it is important to examine whether the measure is appropriate for the population included in the current study. In these circumstances, CFA can be used to examine whether the original structure of the measure works well in the new population. According to the usual procedures, the goodness of fit is assessed by checking the statistical and substantive validity of estimates (i.e. that no estimates lie out of the admissible range, as the case is for negative variances or correlations larger than one, and that no estimates lack a theoretical interpretation, as the case is for estimates of unexpected sign), the convergence of the estimation procedure, the empirical identification of the model, the statistical significance of the parameters, and the goodness of fit to the covariance matrix. Since complex models are inevitably miss specified to a certain extent, the standard $\chi 2$ test of the hypothesis of perfect fit to the population covariance matrix is given less importance than measures of the degree of approximation between the model and the population covariance matrix. The root mean squared error of approximation (RMSEA) is selected as such a measure. For the analysis initially an input model was developed by using AMOS-18 graphics. The rectangle represents observed factors, Ovals in drawn in the diagram represents unobserved variable. The curved double headed arrows represent correlations or co-variances among the unobserved variables and the straight headed arrow represents the factor loadings of the observed variables. The small circles with arrows pointing from the circles to the observed variables represent errors /unique factors, which are also known as squared multiple correlation of the standard error. This initial model is refined to reach the final model.
First we consider measurement model of factors to test the convergent validity and then Awareness regarding various post office savings schemes.

3. RESULTS AND DISCUSSIONS

3.1 To evaluate the brand effect on customer loyalty, with a focus on the Post Office Savings Bank (POSB).

Next we considered the Brand name of Post Office Service Schemes. That is in this case we test the following hypothesis

H1: BN1 has significant impact on Brand name
H2: BN2 has significant impact on Brand name
H3: BN3 has significant impact on Brand name
H4: BN4 has significant impact on Brand name
H5: BN5 has significant impact on Brand name
H6: BN6 has significant impact on Brand name
H7: BN7 has significant impact on Brand name
H8: BN8 has significant impact on Brand name

Table 3 Model fit Indices for CFA – Brand name of Post Office Service Schemes

	χ^2	DF	P	Normed $\chi 2$	GFI	AGFI	NFI	TLI	CFI	RMR	RMSEA
Brand Name	18.228	11	.076	1.657	.995	.983	.996	.996	.998	.021	.028

All the attributes loaded significantly on the latent constructs. The value of the fit indices indicates a reasonable fit of the measurement model with data. In Table 4 we present the regression coefficients

Table 4 The regression Coefficients - Brand name of Post Office Service Schemes

Factors/ Latent Variables (Dependent Variable)	Construct (Independent Variable)	Regression Coefficient	C.R.	P	Variance explained (%)
Brand name	BN1	0.776	30.058	<0.001	60.2
	BN2	0.906	43.689	<0.001	82.1
	BN3	0.727	26.779	<0.001	52.8
	BN4	0.640	22.013	<0.001	41.0
	BN5	0.849	36.367	<0.001	72.1
	BN6	0.818	33.411	<0.001	66.9
	BN7	0.666	23.330	<0.001	44.4
	BN8	0.776	30.058	<0.001	60.2

H1: BN1 has significant impact on Brand name

The results exhibited in Table 4 revealed that the regulatory construct BN1 has significant impact on Brand name of Indian Postal Schemes as the standardised direct effect of this construct on brand name was 0.776, which is greater than the recommended value of 0.4 (p value significant). So the hypothesis H1 is accepted and concludes that BN1 (Reputation and credibility of Post Office Savings Bank when Compared with other banks) has significant impact on Brand name.

H2: BN2 has significant impact on Brand name

The results exhibited in Table 4 revealed that the regulatory construct BN2has significant impact on Brand name of Indian Postal Schemes as the standardised direct effect of this construct on brand name was 0.906, which is greater than the recommended value of 0.4 (p value significant). So the hypothesis H2 is accepted and concludes that BN2 (Post Office Savings Bank provide appropriate and suitable services) has significant impact on Brand name.

H3: BN3 has significant impact on Brand name

The results exhibited in Table 4 revealed that the regulatory construct BN3has significant impact on Brand name of Indian Postal Schemes as the standardised direct effect of this construct on brand name was 0.727, which is greater than the recommended value of 0.4 (p value significant). So the hypothesis H3 is accepted and concludes that BN3 (Popularity of Post Office Savings Bank among the friends of its customer) has significant impact on Brand name.

H4: BN4 has significant impact on Brand name

The results exhibited in Table 4 revealed that the regulatory construct BN4has significant impact on Brand name of Indian Postal Schemes as the standardised direct effect of this construct on brand name was 0.640, which is greater than the recommended value of 0.4 (p value significant). So the hypothesis H4 is accepted and concludes that BN4 (The name of Post Office Savings Bank is widely recognized by common People) has significant impact on Brand name.

H5: BN5 has significant impact on Brand name

The results exhibited in Table 4 revealed that the regulatory construct BN5has significant impact on Brand name of Indian Postal Schemes as the standardised direct effect of this construct on brand name was 0.849, which is greater than the recommended value of 0.4 (p value significant). So the hypothesis H5 is accepted and concludes that BN5 (Using the Post Office Savings Bank services is very easy and attractive) has significant impact on Brand name.

H6: BN6 has significant impact on Brand name

The results exhibited in Table 4 revealed that the regulatory construct BN6has significant impact on Brand name of Indian Postal Schemes as the standardised direct effect of this construct on brand name was 0.818, which is greater than the recommended value of 0.4 (p value significant). So the hypothesis H6 is accepted and concludes that BN6 (Banking services of Post Office Savings Bank are harmonious with its customer lifestyle) has significant impact on Brand name.

H7: BN7 has significant impact on Brand name

The results exhibited in Table 4 revealed that the regulatory construct BN7has significant impact on Brand name of Indian Postal Schemes as the standardised direct effect of this construct on brand name was 0.666, which is greater than the recommended value of 0.4 (p value significant). So the hypothesis H7 is accepted and concludes that BN7 (The number of the branches of the Post Office Savings Bank) has significant impact on Brand name.

H8: BN8 has significant impact on Brand name

The results exhibited in Table 4 revealed that the regulatory construct BN8has significant impact on Brand name of Indian Postal Schemes as the standardised direct effect of this construct on brand name was 0.776, which is greater than the recommended value of 0.4 (p value significant). So the hypothesis H8 is accepted and concludes that BN8 (The work culture at the Post Office Savings Bank) has significant impact on Brand name.

Chart 1

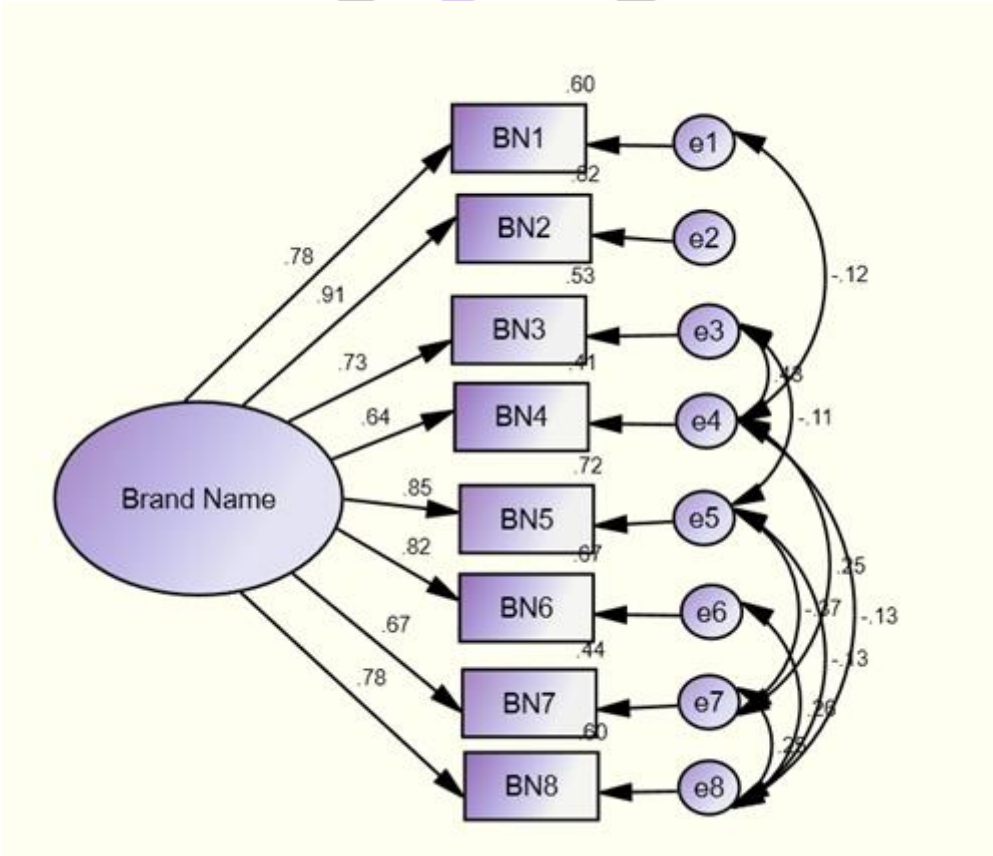

Next we considered the Perceived quality of Post Office Service Schemes. That is in this case we test the following hypothesis

H1: PQ1 has significant impact on Perceived quality
H2: PQ2 has significant impact on Perceived quality
H3: PQ3 has significant impact on Perceived quality
H4: PQ4 has significant impact on Perceived quality
H5: PQ5 has significant impact on Perceived quality
H6: PQ6 has significant impact on Perceived quality
H7: PQ7 has significant impact on Perceived quality
H8: PQ8 has significant impact on Perceived quality

Table 5 Model fit Indices for CFA – Perceived quality of Post Office Service Schemes

	χ^2	DF	P	Normed χ^2	GFI	AGFI	NFI	TLI	CFI	RMR	RMSEA
Perceived quality	13.303	8	.102	1.663	.996	.982	.998	.997	.999	.020	.028

All the attributes loaded significantly on the latent constructs. The value of the fit indices indicates a reasonable fit of the measurement model with data. In Table 6 we present the regression coefficients

Table 6 The regression Coefficients - Perceived quality of Post Office Service Schemes

Factors/ Latent Variables (Dependent Variable)	Construct (Independent Variable)	Regression Coefficient	C.R.	P	Variance explained (%)
Perceived quality	PQ1	0.662	23.122	<0.001	43.9
	PQ2	0.701	25.239	<0.001	49.1
	PQ3	0.817	33.324	<0.001	66.7
	PQ4	0.836	35.066	<0.001	69.9
	PQ5	0.803	32.141	<0.001	64.5
	PQ6	0.887	40.871	<0.001	78.6
	PQ7	0.808	32.555	<0.001	65.2
	PQ8	0.906	43.689	<0.001	82.2

H1: PQ1 has significant impact on Perceived quality

The results exhibited in Table 6 revealed that the regulatory construct PQ1 has significant impact on Perceived quality of Indian Postal Schemes as the standardised direct effect of this construct on perceived quality was 0.662, which is greater than the recommended value of 0.4 (p value significant). So the hypothesis H1 is accepted and concludes that PQ1 (Post Office Savings Bank is equipped with modern technology and equipment) has significant impact on perceived quality.

H2: PQ2 has significant impact on Perceived quality

The results exhibited in Table 6 revealed that the regulatory construct PQ2 has significant impact on Perceived quality of Indian Postal Schemes as the standardised direct effect of this construct on perceived quality was 0.701, which is greater than the recommended value of 0.4 (p value significant). So the hypothesis H2 is accepted and concludes that PQ2 (Infra Structure of Post Office Savings Bank is visually attractive and convenient in accessing the service) has significant impact on perceived quality.

H3: PQ3 has significant impact on Perceived quality

The results exhibited in Table 6 revealed that the regulatory construct PQ3 has significant impact on Perceived quality of Indian Postal Schemes as the standardised direct effect of this construct on perceived quality was 0.817, which is greater than the recommended value of 0.4 (p value significant). So the hypothesis H3 is accepted and concludes that PQ3 (Solving the customers problem when they faced problems because of lack of experience by customer) has significant impact on perceived quality.

H4: PQ4 has significant impact on Perceived quality

The results exhibited in Table 6 revealed that the regulatory construct PQ4 has significant impact on Perceived quality of Indian Postal Schemes as the standardised direct effect of this construct on perceived quality was 0.836, which is greater than the recommended value of 0.4 (p value significant). So the hypothesis H4 is accepted and concludes that PQ4 (The reliability of Post Office Savings Bank for its various services) has significant impact on perceived quality.

H5: PQ5 has significant impact on Perceived quality

The results exhibited in Table 6 revealed that the regulatory construct PQ5 has significant impact on Perceived quality of Indian Postal Schemes as the standardised direct effect of this construct on perceived quality was 0.803, which is greater than the recommended value of 0.4 (p value significant). So the hypothesis H5 is accepted and concludes that PQ5 (Prompt and immediate banking services) has significant impact on perceived quality.

H6: PQ6 has significant impact on Perceived quality

The results exhibited in Table 6 revealed that the regulatory construct PQ6 has significant impact on Perceived quality of Indian Postal Schemes as the standardised direct effect of this construct on perceived quality was 0.887, which is greater than the recommended value of 0.4 (p value significant). So the hypothesis H6 is accepted and concludes that PQ6 (Staff willingness to help customers) has significant impact on perceived quality.

H7: PQ7 has significant impact on Perceived quality

The results exhibited in Table 6 revealed that the regulatory construct PQ7 has significant impact on Perceived quality of Indian Postal Schemes as the standardised direct effect of this construct on perceived quality was 0.808, which is greater than the recommended value of 0.4 (p value significant). So the hypothesis H7 is accepted and concludes that PQ7 (Good behaviour of Post Office Savings Bank staff) has significant impact on perceived quality.

H8: PQ8 has significant impact on Perceived quality

The results exhibited in Table 6 revealed that the regulatory construct PQ8 has significant impact on Perceived quality of Indian Postal Schemes as the standardised direct effect of this construct on perceived quality was 0.906, which is greater than the recommended value of 0.4 (p value significant). So the hypothesis H8 is accepted and concludes that PQ8 (Post Office Savings Bank staff have adequate and sufficient knowledge about bank services) has significant impact on perceived quality.

Chart 2

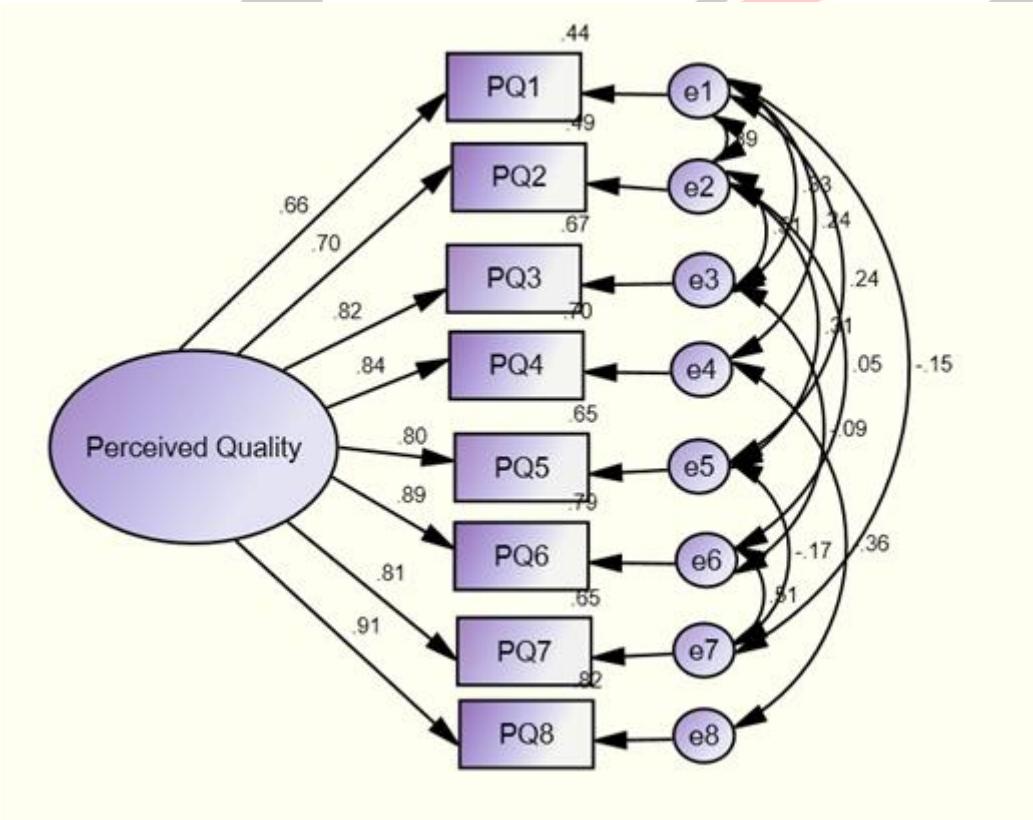

Next we considered the Satisfaction with Post Office Service Schemes. That is in this case we test the following hypothesis
H1: SN1 has significant impact on Satisfaction
H2: SN2 has significant impact on Satisfaction
H3: SN3 has significant impact on Satisfaction
H4: SN4 has significant impact on Satisfaction
H5: SN5 has significant impact on Satisfaction
H6: SN6 has significant impact on Satisfaction
H7: SN7 has significant impact on Satisfaction
H8: SN8 has significant impact on Satisfaction

Table 7 Model fit Indices for CFA – Satisfaction with Post Office Service Schemes

	χ^2	DF	P	Normed χ^2	GFI	AGFI	NFI	TLI	CFI	RMR	RMSEA
Satisfaction	18.914	9	.026	2.102	.994	.977	.995	.991	.997	.028	.036

All the attributes loaded significantly on the latent constructs. The value of the fit indices indicates a reasonable fit of the measurement model with data. In Table 8 we present the regression coefficients

Table 8 The regression Coefficients - Satisfaction with Post Office Service Schemes

Factors/ Latent Variables (Dependent Variable)	Construct (Independent Variable)	Regression Coefficient	C.R.	P	Variance explained (%)
Satisfaction	SN1	0.607	20.445	<0.001	36.8
	SN2	0.727	26.779	<0.001	52.9
	SN3	0.561	18.416	<0.001	31.5
	SN4	0.700	25.182	<0.001	49.0
	SN5	0.874	39.190	<0.001	76.4
	SN6	0.823	33.855	<0.001	67.7
	SN7	0.557	18.247	<0.001	31.1
	SN8	0.526	16.974	<0.001	27.7

H1: SN1 has significant impact on Satisfaction

The results exhibited in Table 8 revealed that the regulatory construct SN1 has significant impact on satisfaction with Post Office Service Schemes as the standardised direct effect of this construct on satisfaction was 0.607, which is greater than the recommended value of 0.4 (p value significant). So the hypothesis H1 is accepted and concludes that SN1 (The timing of Post Office Savings Bank) has significant impact on satisfaction.

H2: SN2 has significant impact on Satisfaction

The results exhibited in Table 8 revealed that the regulatory construct SN2 has significant impact on satisfaction with Post Office Service Schemes as the standardised direct effect of this construct on satisfaction was 0.727, which is greater than the recommended value of 0.4 (p value significant). So the hypothesis H2 is accepted and concludes that SN2(Number of employees in each branch of the Post Office Savings Bank) has significant impact on satisfaction.

H3: SN3 has significant impact on Satisfaction

The results exhibited in Table 8 revealed that the regulatory construct SN3 has significant impact on satisfaction with Post Office Service Schemes as the standardised direct effect of this construct on satisfaction was 0.561, which is greater than the recommended value of 0.4 (p value significant). So the hypothesis H3 is accepted and concludes that SN3 (The location of the ATM's of Post Office Savings Bank) has significant impact on satisfaction.

H4: SN4 has significant impact on Satisfaction

The results exhibited in Table 8 revealed that the regulatory construct SN4 has significant impact on satisfaction with Post Office Service Schemes as the standardised direct effect of this construct on satisfaction was 0.700, which is greater than the recommended value of 0.4 (p value significant). So the hypothesis H4 is accepted and concludes that SN4 (The products and services offered by the Post Office Savings Bank) has significant impact on satisfaction.

H5: SN5 has significant impact on Satisfaction

The results exhibited in Table 8 revealed that the regulatory construct SN5 has significant impact on satisfaction with Post Office Service Schemes as the standardised direct effect of this construct on satisfaction was 0.874, which is greater than the recommended value of 0.4 (p value significant). So the hypothesis H5 is accepted and concludes that SN5 (The interest rate offered by the Post Office Savings Bank on various deposits) has significant impact on satisfaction.

H6: SN6 has significant impact on Satisfaction

The results exhibited in Table 8 revealed that the regulatory construct SN6 has significant impact on satisfaction with Post Office Service Schemes as the standardised direct effect of this construct on satisfaction was 0.823, which is greater than the recommended value of 0.4 (p value significant). So the hypothesis H6 is accepted and concludes that SN6 (The rates of interestcharged on the loans by Post Office Savings Bank) has significant impact on satisfaction.

H7: SN7 has significant impact on Satisfaction

The results exhibited in Table 8 revealed that the regulatory construct SN7 has significant impact on satisfaction with Post Office Service Schemes as the standardised direct effect of this construct on satisfaction was 0.557, which is greater than the recommended value of 0.4 (p value significant). So the hypothesis H7 is accepted and concludes that SN7(The Post Office Savings Bank charge its customers or impose penalties.) has significant impact on satisfaction.

H8: SN8 has significant impact on Satisfaction
The results exhibited in Table 8 revealed that the regulatory construct SN8 has significant impact on satisfaction with Post Office Service Schemes as the standardised direct effect of this construct on satisfaction was 0.526, which is greater than the recommended value of 0.4 (p value significant). So the hypothesis H8 is accepted and concludes that SN8 (The charges that the Post Office Savings Bank collects when compared with other banks) has significant impact on satisfaction.

Chart 3

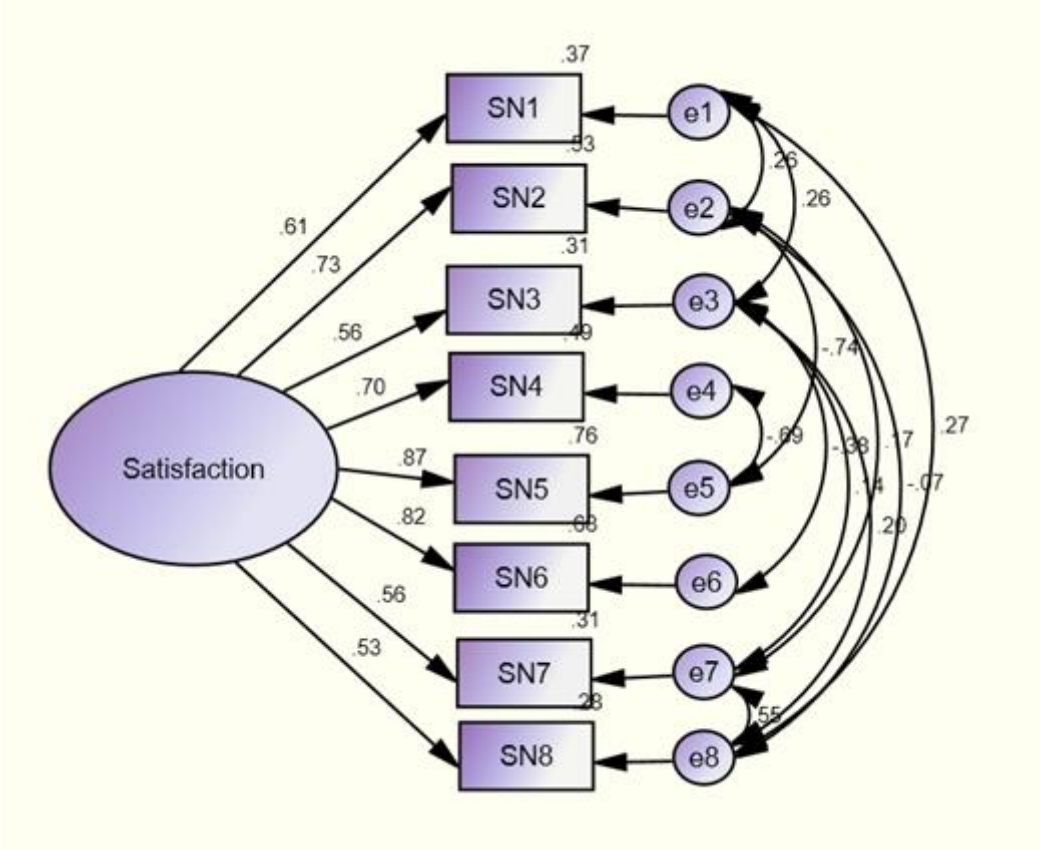

Next we considered the Loyalty with Post Office Service Schemes. That is in this case we test the following hypothesis
H1: LT1 has significant impact on Loyalty
H2: LT2 has significant impact on Loyalty
H3: LT3 has significant impact on Loyalty
H4: LT4 has significant impact on Loyalty
H5: LT5 has significant impact on Loyalty
H6: LT6 has significant impact on Loyalty
H7: LT7 has significant impact on Loyalty
H8: LT8 has significant impact on Loyalty

Table 9 Model fit Indices for CFA –Loyalty with Post Office Service Schemes

	χ^2	DF	P	Normed χ^2	GFI	AGFI	NFI	TLI	CFI	RMR	RMSEA
Loyalty	10.289	10	.416	1.029	.997	.989	.997	1.000	1.000	.014	.006

All the attributes loaded significantly on the latent constructs. The value of the fit indices indicates a reasonable fit of the measurement model with data. In Table 10 we present the regression coefficients

Table 10 The regression Coefficients – Loyalty with Post Office Service Schemes

Factors/ Latent Variables (Dependent Variable)	Construct (Independent Variable)	Regression Coefficient	C.R.	P	Variance explained (%)
Loyalty	LT1	0.509	16.299	<0.001	25.9
	LT2	0.807	32.471	<0.001	65.1
	LT3	0.890	41.285	<0.001	79.1
	LT4	0.724	26.596	<0.001	52.4
	LT5	0.673	23.698	<0.001	45.3
	LT6	0.944	51.495	<0.001	89.0
	LT7	0.389	11.922	<0.001	15..1
	LT8	0.648	22.410	<0.001	42.0

H1: LT1 has significant impact on Loyalty

The results exhibited in Table 10 revealed that the regulatory construct LT1 has significant impact on loyalty with Post Office Service Schemes as the standardised direct effect of this construct on loyalty was 0.509, which is greater than the recommended value of 0.4 (p value significant). So the hypothesis H1 is accepted and concludes that LT1(Continuous use of Post Office Savings Bank Services) has significant impact on loyalty.

H2: LT2 has significant impact on Loyalty

The results exhibited in Table 10 revealed that the regulatory construct LT2 has significant impact on loyalty with Post Office Service Schemes as the standardised direct effect of this construct on loyalty was 0.807, which is greater than the recommended value of 0.4 (p value significant). So the hypothesis H2 is accepted and concludes that LT2(Recommended the Post Office Savings Bank to friends and acquaintances) has significant impact on loyalty.

H3: LT3 has significant impact on Loyalty

The results exhibited in Table 10 revealed that the regulatory construct LT3 has significant impact on loyalty with Post Office Service Schemes as the standardised direct effect of this construct on loyalty was 0.890, which is greater than the recommended value of 0.4 (p value significant). So the hypothesis H3 is accepted and concludes that LT3(Post Office Savings Bank builds better future) has significant impact on loyalty.

H4: LT4 has significant impact on Loyalty

The results exhibited in Table 10 revealed that the regulatory construct LT4 has significant impact on loyalty with Post Office Service Schemes as the standardised direct effect of this construct on loyalty was 0.724, which is greater than the recommended value of 0.4 (p value significant). So the hypothesis H4 is accepted and concludes that LT4(Post Office Savings Bank is small and safe investment) has significant impact on loyalty.

H5: LT5 has significant impact on Loyalty

The results exhibited in Table 10 revealed that the regulatory construct LT5 has significant impact on loyalty with Post Office Service Schemes as the standardised direct effect of this construct on loyalty was 0.673, which is greater than the recommended value of 0.4 (p value significant). So the hypothesis H5 is accepted and concludes that LT5(Post Office Savings Bank assured return without risk) has significant impact on loyalty.

H6: LT6 has significant impact on Loyalty

The results exhibited in Table 10 revealed that the regulatory construct LT2 has significant impact on loyalty with Post Office Service Schemes as the standardised direct effect of this construct on loyalty was 0.944, which is greater than the recommended value of 0.4 (p value significant). So the hypothesis H2 is accepted and concludes that LT2(Post Office Savings Bank is nearest and cheapest savings) has significant impact on loyalty.

H7: LT7 has significant impact on Loyalty

The results exhibited in Table 10 revealed that the regulatory construct LT2 has significant impact on loyalty with Post Office Service Schemes as the standardised direct effect of this construct on loyalty was 0.389, which is greater than the recommended value of 0.4 (p value significant). So the hypothesis H2 is accepted and concludes that LT2(Post Office Savings Bank help reduce tax Burden) has significant impact on loyalty.

H8: LT8 has significant impact on Loyalty

The results exhibited in Table 10 revealed that the regulatory construct LT2 has significant impact on loyalty with Post Office Service Schemes as the standardised direct effect of this construct on loyalty was 0.648, which is greater than the recommended value of 0.4 (p value significant). So the hypothesis H2 is accepted and concludes that LT2(Post Office Savings Bank provide security for life) has significant impact on loyalty.

Chart 4

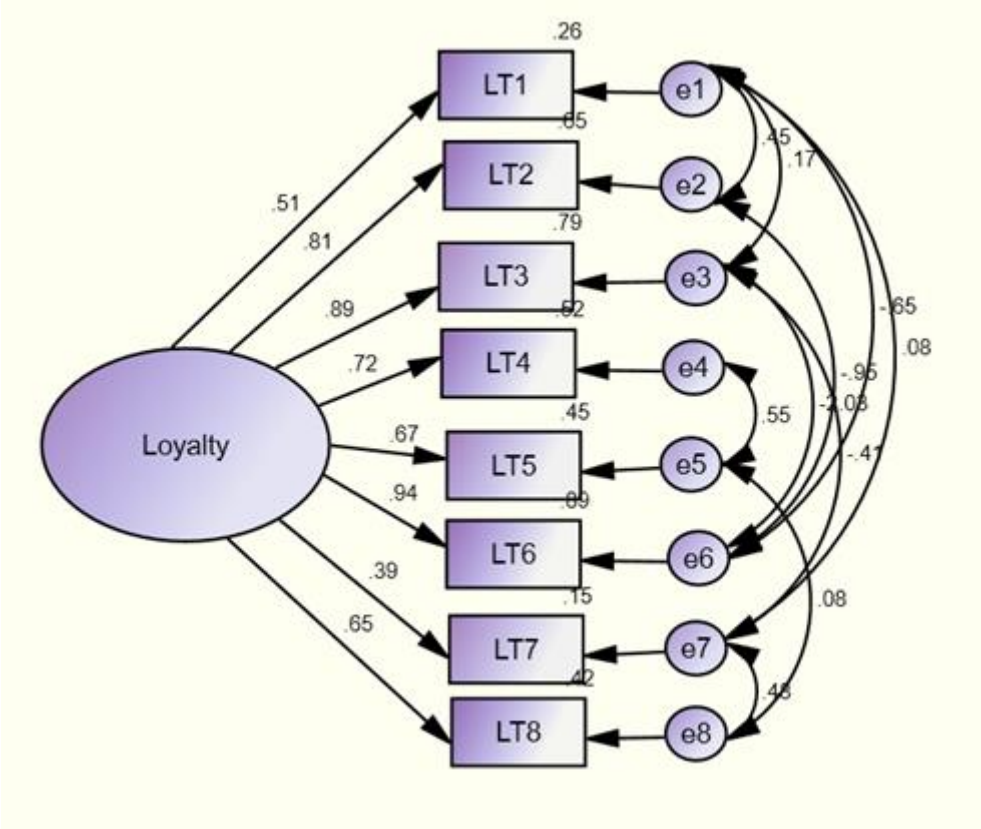

Consider the Satisfaction with the basic amenities available in post office. That is in this case we test the following hypothesis

H1: BA1 has significant impact on Satisfaction with basic amenities
H2: BA2 has significant impact on Satisfaction with basic amenities
H3: BA3 has significant impact on Satisfaction with basic amenities
H4: BA4 has significant impact on Satisfaction with basic amenities
H5: BA5 has significant impact on Satisfaction with basic amenities
H6: BA6 has significant impact on Satisfaction with basic amenities
H7: BA7 has significant impact on Satisfaction with basic amenities
H8: BA8 has significant impact on Satisfaction with basic amenities

Table 11 Model fit Indices for CFA – Satisfaction with Post Office Service Schemes

	χ^2	DF	P	Normed χ^2	GFI	AGFI	NFI	TLI	CFI	RMR	RMSEA
Satisfaction with basic amenities	16.906	9	.050	1.878	.995	.980	.996	.994	.998	.011	.032

All the attributes loaded significantly on the latent constructs. The value of the fit indices indicates a reasonable fit of the measurement model with data. In Table 12 we present the regression coefficients

Table 12 The regression Coefficients - Satisfaction with Post Office Service Schemes

Factors/ Latent Variables (Dependent Variable)	Construct (Independent Variable)	Regression Coefficient	C.R.	P	Variance explained (%)
Satisfaction with basic amenities	BA1	0.538	17.459	<0.001	28.9
	BA2	0.606	20.399	<0.001	36.7
	BA3	0.732	27.090	<0.001	53.7
	BA4	0.817	33.324	<0.001	66.8
	BA5	0.851	36.577	<0.001	72.5
	BA6	0.618	20.956	<0.001	38.2
	BA7	0.767	29.412	<0.001	58.8
	BA8	0.814	33.064	<0.001	66.3

H1: BA1 has significant impact on Satisfaction with basic amenities

The results exhibited in Table 12 revealed that the regulatory construct BA1 has significant impact on Satisfaction with basic amenities as the standardised direct effect of this construct on loyalty was 0.538, which is greater than the recommended value of 0.4 (p value significant). So the hypothesis H1 is accepted and concludes that BA1(Location) has significant impact on Satisfaction with basic amenities.

H2: BA2 has significant impact on Satisfaction with basic amenities

The results exhibited in Table 12 revealed that the regulatory construct BA2 has significant impact on Satisfaction with basic amenities as the standardised direct effect of this construct on loyalty was 0.606, which is greater than the recommended value of 0.4 (p value significant). So the hypothesis H2 is accepted and concludes that BA2(Parking facilities) has significant impact on Satisfaction with basic amenities.

H3: BA3 has significant impact on Satisfaction with basic amenities

The results exhibited in Table 12 revealed that the regulatory construct BA3 has significant impact on Satisfaction with basic amenities as the standardised direct effect of this construct on loyalty was 0.732, which is greater than the recommended value of 0.4 (p value significant). So the hypothesis H3 is accepted and concludes that BA3(Infrastructure facilities) has significant impact on Satisfaction with basic amenities.

H4: BA4 has significant impact on Satisfaction with basic amenities

The results exhibited in Table 12 revealed that the regulatory construct BA4 has significant impact on Satisfaction with basic amenities as the standardised direct effect of this construct on loyalty was 0.817, which is greater than the recommended value of 0.4 (p value significant). So the hypothesis H4 is accepted and concludes that BA4(Seating facilities) has significant impact on Satisfaction with basic amenities.

H5: BA5 has significant impact on Satisfaction with basic amenities

The results exhibited in Table 12 revealed that the regulatory construct BA5 has significant impact on Satisfaction with basic amenities as the standardised direct effect of this construct on loyalty was 0.851, which is greater than the recommended value of 0.4 (p value significant). So the hypothesis H5 is accepted and concludes that BA5(Adequate counters) has significant impact on Satisfaction with basic amenities.

H6: BA6 has significant impact on Satisfaction with basic amenities

The results exhibited in Table 12 revealed that the regulatory construct BA6 has significant impact on Satisfaction with basic amenities as the standardised direct effect of this construct on loyalty was 0.618, which is greater than the recommended value of 0.4 (p value significant). So the hypothesis H6 is accepted and concludes that BA6(Queue system in the counter) has significant impact on Satisfaction with basic amenities.

H7: BA7 has significant impact on Satisfaction with basic amenities

The results exhibited in Table 12 revealed that the regulatory construct BA7 has significant impact on Satisfaction with basic amenities as the standardised direct effect of this construct on loyalty was 0.767, which is greater than the recommended value of 0.4 (p value significant). So the hypothesis H7 is accepted and concludes that BA7(Adequate space in post office) has significant impact on Satisfaction with basic amenities.

H8: BA8 has significant impact on Satisfaction with basic amenities

The results exhibited in Table 12 revealed that the regulatory construct BA8 has significant impact on Satisfaction with basic amenities as the standardised direct effect of this construct on loyalty was 0.814, which is greater than the recommended value of 0.4 (p value significant). So the hypothesis H_8 is accepted and concludes that BA8(Drinking water facilities) has significant impact on Satisfaction with basic amenities.

Chart 5

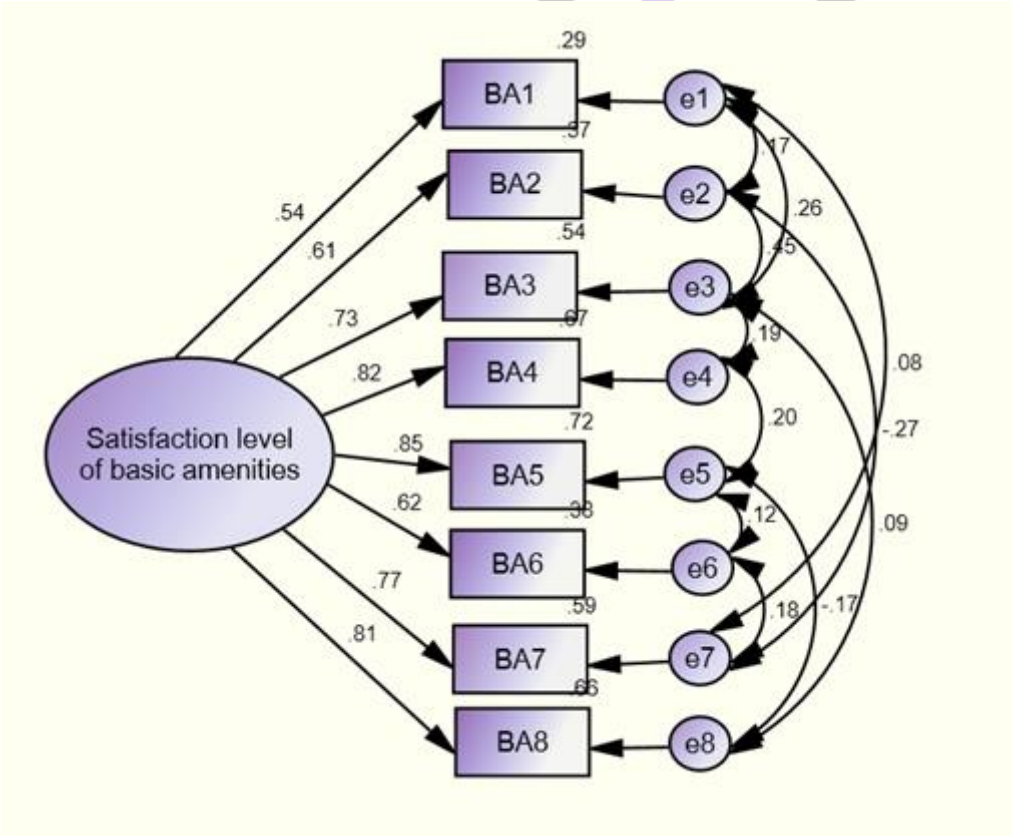

3.2 To find the Level of awareness regarding post office savings schemes

One of the objective is to find the Level of awareness regarding post office savings schemes. For this the respondents are asked 9 questions on seven point Likert scale. The responses are scored as 1 for extremely not aware, 2 for moderately not aware, 3 for slightly not aware, 4 for neutral, 5 for slightly aware, 6 for moderately aware, 7 for extremely aware. The total score of the 9 questions for all 846 respondents is found out, based on which we calculate the mean % score of Level of awareness regarding post office savings schemes$\left[MPS = \frac{MeanScore \times 100}{Maximumpossiblescore}\right]$. This score is classified into one of the four groups as poor or low if the mean % score is less than 35%, average if the mean % score is between 35 to 50 per cent, good or medium if the mean % score lies in the interval 50 to 75% and excellent or high if the mean % score is above 75%. A one sample Z test is carried out to test the significance. The following table gives the Mean, SD, Mean % Score and Z value of the variable considered. (Loyd, B. H., & R. R. Abidin. R. R. (1985). Revision of the Parent Stress Index.*Journal of Pediatric Psychiatry, 10*(2), 169).

Table 13 Mean, Standard deviation and z value for Level of awareness regarding post office savings schemes

Variable	N	Mean	Standard Deviation	Mean % score	CV	z	p value
Level of awareness regarding post office savings schemes	846	38.76	14.39	61.52	37.12	14.676	<0.001

The mean percentage score Level of awareness regarding post office savings schemes is 61.52% which indicate that level of awareness regarding post office savings schemes is good or medium. The CV= $\frac{\text{Standard deviation*100}}{\text{Mean}}$ indicates that this score is not stable as the value is more than 20%. To test whether the sample information that we observe exists in the population or to verify that the level of awareness regarding post office savings schemes is good or not, we formulate the hypothesis

H_0: The level of awareness regarding post office savings schemes is average

H_1: The level of awareness regarding post office savings schemes is good

To test the above hypothesis, we use one sample Z test and the result is exhibited in Table 13. From the table the p value is less than 0.05 which indicates that the test is significant. So we conclude that the level of awareness regarding post office savings schemes is good.

3.3 To find the level of satisfaction of basic amenities available in post office

Next objective is to find the level of satisfaction of basic amenities available in Post office. For this the respondents are asked 8 questions on seven point Likert scale. The responses are scored as 1 for very poor, 2 for poor, 3 for fair, 4 for good, 5 for very good, 6 for excellent, 7 for exceptional. The total score of the 8 questions for all 846 respondents is found out, based on which we calculate the mean % score of Level of satisfaction of basic amenities available in post office.

Table 14 Mean, Standard deviation and z value for Level of satisfaction of basic amenities available in post offices

Variable	N	Mean	Standard Deviation	Mean % score	CV	z	p value
Satisfaction level of basic amenities	846	22.12	6.15	39.50	27.79	-27.816	<0.001

The mean percentage score Level of satisfaction of basic amenities available in post offices is 39.50% which indicate that level of satisfaction of basic amenities available in Post office savings schemes is average. The CV indicates that this score is not stable as the value is more than 20%. To test whether the sample information that we observe exists in the population or to verify that the Level of satisfaction of basic amenities available in post offices is good or not, we formulate the hypothesis

H_0: The Level of satisfaction of basic amenities available in post offices is good

H_1: The Level of satisfaction of basic amenities available in post offices is average

To test the above hypothesis we use one sample Z test and the result is exhibited in Table 14. From the table the p value is less than 0.05 which indicates that the test is significant. So we conclude that the level of satisfaction of basic amenities available in Post office savings schemes is average

FULL MODEL

One of the objectives is to evaluate the influence of perceived quality and customer satisfaction on customer loyalty. Now we use Structural Equation Model to evaluate the impact of these constructs on customer loyalty. In other words, we use SEM to test the hypothesis

Table 15 Model fit Indices for CFA

	χ^2	DF	P	Normed χ^2	GFI	AGFI	NFI	TLI	CFI	RMR	RMSEA
	521.792	9	.000	4.977	.932	.908	.906	.980	.908	.101	.260

All the attributes loaded significantly on the latent constructs. The value of the fit indices indicates a reasonable fit of the measurement model with data. In Table 16 we present the regression coefficients

Table 16 The regression Coefficients

Path	Estimate	Critical Ratio (CR)	P	Variance explained
Post Office Service Schemes →Perceived Quality	1.810	18.058	<0.001	0.0
Brand name →Perceived Quality	0.901	42.899	<0.001	0.0
Brand name →Customer satisfaction	1.221	33.499	<0.001	0.0
Basic Amenities →Customer satisfaction	0.919	45.949	<0.001	-105.3
Perceived Quality → Customer loyalty	1.312	29.076	<0.001	0.0
Customer satisfaction → Customer loyalty	0.968	59.797	<0.001	-162.1
Customer satisfaction → Perceived quality	0.738	27.469	<0.001	-254.6

Chart 6

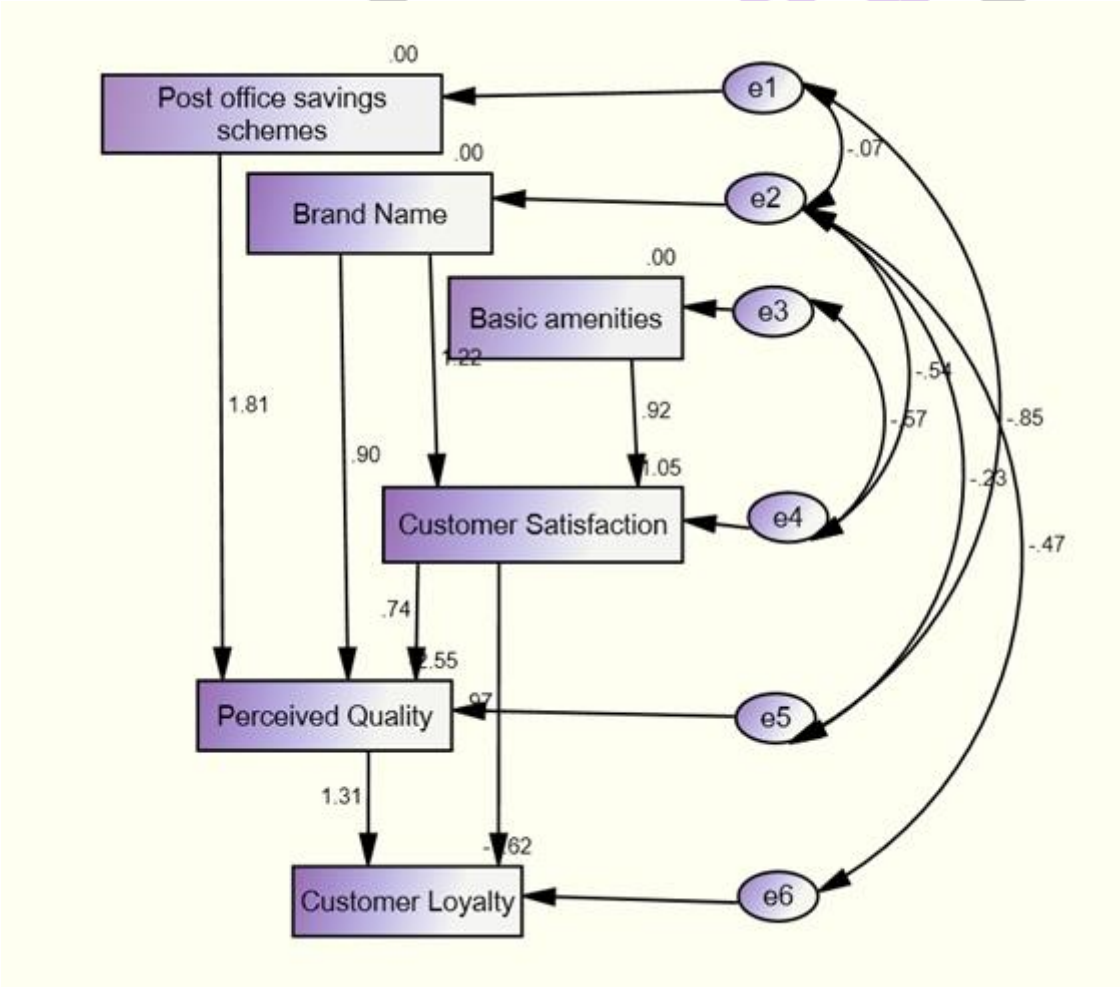

Chart 7 Research model derived from Esen Gurbuz model

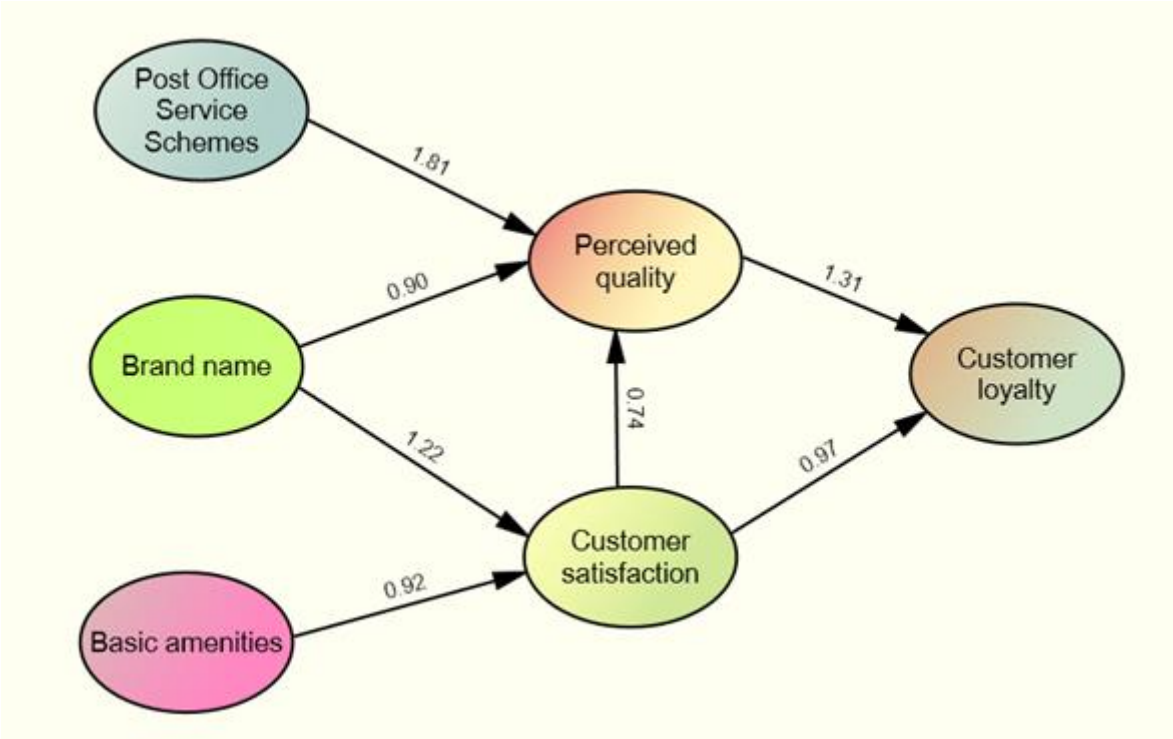

4. CONCLUSIONS

This research was undertaken with the primary objective of explaining brand effect on customer loyalty. After testing the research hypothesis, it has been found that there is a positive relationship between brand name of the Post Office Savings Bank and perceived quality. In other words, it can be claimed that brand of the Post Office Savings Bank has influence on its customers' perceived quality. It shows that the Post Office Savings Bank is very competent to attract customers in terms of qualitative criteria such as Infrastructure, solving customer problems, reliability, immediate and prompt services and staff knowledge. However, there is a positive relationship between the brand name of the Post Office Savings Bank and customer satisfaction. The positive relationship shows that customers are satisfied with services and they continue to use the Post Office Savings Banks services. They are loyal to the Post Office Savings Bank and they recommend the Post Office Savings Bank to their friends and relatives. It has been found that the level of satisfaction with regard to basic amenities of Post Office Savings Bank is average. This has to be improved as it influences customer satisfaction. Level of satisfaction towards service aspects of Post office savings schemes need to be given consideration as it has got influence on perceived quality. In today's competitive market, Post Office Savings Bank should retain and maintain their customers, because the cost of losing customer is higher than the cost of finding a new one. Post Office Savings Bank should increase trustworthiness of their brand through promises which can be implemented in the near future in order to increase their constant and sustainable commitment to their customers. In this way, Post Office Savings Bank can keep and retain their customers and prevent them from shifting to other competitors.

5. SCOPE FOR FURTHER RESEARCH

Although data collection in this research was based on questionnaire which the customers and no- customers of post office savings bank responded to, it is recommended that in future studies, other tools be used such as structured interviews and observations in order to study and investigate the variables.

This research is focused on customer loyalty and customer retention. Future research can determine customer profitability for post office savings bank.

It is suggested that future research should study increasing brand power in the area of integrated marketing communications.

Also it is recommended, that future research shall use observation methods or interviews with experts in order to identify, measure and prioritize the indices (indicators) for measuring the variables.

In this research for SEM the recommended value is 0.4 (p value significant). Further research can be conducted with a different p value.

REFERENCES

1. Taylor, Steven, A. Celuch, Kevin and Kronin, Stephen (2004), The importance of brand equity to customer loyalty, Journal of Product & Brand Management, Vol. 13, No.4, pp.217 – 227
2. Catherine, Dawson, *Practical Research Methods*, How To Books, United Kingdom, 2002, pp.14-20.
3. Mischkind, L. A., "Is Employee Morale Hidden behind Statistics?", Personnel Journal n0.2, 1986, pp.74-79.
4. Van Saane, N., Sluitter, J. K., Verbeek, J. H.-A.M., & Frings-Dresen, M. H. W., Reliability and validity of instruments measuring job-satisfaction-a systematice review, *Occupational Medicine*, 53, 2003, pp. 191-200.
5. Cronbach, L. J., & Meehl, P.E., Construct validity in psychological tests, Psychological Bulletin, 52, 1994, pp. 281-302.
6. Koeske, G. F., Kirk, S. A., Koeske, R. D., & Rauktis, M. E., Measuring the Monday blue: Validation of a job satisfaction scale for the human services, *Social Work Research*, 18, 1994, pp. 27-35.
7. Berelson, Bernard, *Content Analysis in Communication Research*, New York: Free Press, 1952, pp. 45-60.
8. Shadish, W. R., Cook, T. D., and Campbell, D. T., *Experimental and quasi experimental designs for generalized casual inference*, New York: Houghton Mifflin Company, 2002, pp. 153-170.
9. Haynes, S. N., Richard, D. C. S., & Kubany, E. S., Content validity in psychological assessment: A functional approach to concepts and methods, *Psychological Assessment*, 7, 1995, pp. 238-247.
10. Bagozzi, R. P., Yi, Y., & Phillips, L.W., Assessing construct validity on organizational research, Administrative Science Quarterly, 36, 1991, pp. 421-458.
11. Siebert, D. C., & Siebert, C. F., The Caregiver Role Identity Scale: A validation study, *Research on Social Work Practice*, 15, 2005, DOI: 10.1177.1049731504272779, pp. 204-212.
12. Haig, B. D., Exploratory factor analaysis, theory generation, and scientific method, *Multivariate Behavioural Research*, 40, 2005, pp. 303-329.
13. Abbott, A. A., A confirmatory factor analysis of the Professional Opinion Scale: A values assessment instrument, *Research on Social Work Practice*, 13, 2003, pp. 641- 666.
14. Greeno, E. J., Hughes, A. K., Hayward, R. A., & Parker, K. L., A confirmatory factor analysis of the Professional Opinion Scale, *Research on Social Work Practice*, 17, 2007, pp. 482-493.
15. Donna Harrington, *Confirmatory Factor Analysis*, Oxford University Press, 2009, p. 4.
16. Brown, T. A., *Confirmatory factor analysis for applied research*, NewYork, The Guilford Press, 2006.
17. Raykov, T., & Marcoulides, G. A., *A first course in structural equation modeling* (2nd ed.), Mahwah, NJ: Lawrence Erlbaum Associates, Inc, 2006, pp. 153-161.
18. Hack man, J.R., & Oldham, G. R., Development of the job diagnostic survey, Journal of Applied Psychology, 1975, 60:159-170.
19. Weiss, D. J., Dawis, R. V., England, G. W., and Lofquist, L. H., *Manual for the Minnesota Satisfaction Questionnaire* (Minneapolis:Minnesota Studies in Vocational Rehabilitation, Bulletin 45:1965, p. 22.
20. Herbert, G, Heneman III., Donald, P, Schwab., John, A, Fossum., and Lee, D. Dyer, Personnel/*Human Resource Management*, (4 th ed.), Universal Book Stall, New Delhi, 1989, pp. 108- 115.
21. Edwards, A. L., and Kenney, K. C., "A comparison of the Thurstone and Likert techniques of attitude scale construction", *Journal of Applied Psychology*, 30, 1946, pp. 70-83.
22. Ernest, C. Miller., "Attitude Surveys: A Diagnostic Tool," *Personnel*, May-June 1978, pp. 4-10.
23. MacCallum, R. C., Browne, M. W., & Sugawara, H. M., Power analysis and determination of sample size for covariance structure modeling, Psychological Methods, 1, 1996, pp. 130-149.
24. Claire Selltiz and others, Research Methods in Social Relations rev., Methuen & Co. Ltd., London, 1959, pp. 314-320.
25. Grimm, L. G., & Yarnold, P. R., Reading and understanding multivariate statistics, Washington, D.C: American Psychological Association, 2000, pp 201-230.
26. Yuan, K.-H., & Bentler, P. M., On chi-square difference and z tests in mean and covariance Structure analysis when the base model is misspecified, *Educational and Psychological Measurement*, 64, 2004, 737-757.
27. Stevens, J. P., *Applied multivariate statistics for the social sciences*, (4 th ed.), Mahwah, NJ: Lawrence Erlbaum Associates, 2002, pp. 191-201.
28. Tabachnick, B., & Fidell, L. S., *Using multivariate statistics* (5 th ed.), Boston: Allyn and Bacon, 2007, pp. 153-161.
29. Arbucke, J. A., Build 11400, Spring House, *PA: Amos Development Corporation*, 2006a.
30. Byrne., Structural equation modeling with AMOS, EQS, and LISERAL: Comparative approaches to testing for the factorial validity of a measuring instrument, *International Journal of Testing* 1(1), 2001b, pp. 55-86.
31. Kline, R. B., *Principles and practice of structural equation modeling* (2 nd ed.), New York: The Guilford Press, 2005, pp. 7-8.
32. Gignac, G. E., Self-reported emotional intelligence and life satisfaction: Testing incremental predictive validity hypotheses via structural equation modeling (SEM) in a small sample, *Personality and Individual Differences*, 40, 2006, pp. 1569-1577.
33. Thompson, B., Exploratory and Confirmatory factor analysis: Understanding concepts and Applications. Washington, DC.: American Psychological Association, 2004, pp. 99-136.
34. Cohen, J., Cohen, P., West, S. G., & Aiken, L. S., Applied multiple regression/correlation *Analysis for the behavioural sciences* (3 rd ed.), Mahwah, NJ: Erlbaum, 2003, pp. 156-165.

35. Mac Callum, R. C., Working with imperfect models, *Multivariate Behavioural Research*, 38(1), 2003, 113-1392003 http://www.ssicentral.com/lisrel/index.html.
36. Brown, T.A. (2006). *Confirmatory factor analysis for applied research.* New York, NY: The Guildford Press.
37. Bryant, F.B., & Yarnold, P.R. (1995). Principal-components analysis and exploratory and confirmatory factor analysis. In L. Grimm & P. Yarnold (Eds.), *Reading and understanding multivariate statistics* (pp. 99-136). Washington, D.C.: American Psychological Association.
38. Gorsuch, R.L. (1983). *Factor analysis* (2nd ed.) Hillsdale, NY: Erlbaum.
39. Hu, L., & Bentler, P.M. (1999). Cutoff criteria for fit indices in covariance structure analysis: Conventional criteria versus new alternatives. *Structural Equation Modeling, 6,* 1-55.
40. Kalinowski, K.E. (2006). Using structural equation modeling to conduct confirmatory factor analysis.
41. Schumacker, R.E., & Lomax, R.G. (2004). *A beginner's guide to structural equation modeling* (2nd ed.). Mahwah, NJ: Lawrence Erlbaum Associates.
42. Thompson, B. (2004). *Exploratory and confirmatory factor analysis: Understanding concepts and applications*. Washington, D.C.: American Psychological Association.
43. Aidin D, Ozer, M (2005), "The chain of effects from brand trust and brand affect to brand performance: the role of brand loyalty", Journal of Marketing, Vol.65, No. 2, pp. 81-93
44. Beldona, M. and Wesong, P.U. (2007), "The role of emotions in marketing", Journal of the Academy of Marketing Science, Vol. 27 No. 2, pp. 184-206
45. Mootmeni, Alireza et al (1389), "The effect of brand name on customer loyalty", The business management outlook, No.14, pp 89-105.
46. Sivada, Dave, and Proit, Biker (2000), "Enterprise Marketing Management", New Jersey, John Wiley & Sons, Inc. Publishing.