Recent Developments in Direct-Current Power Transmission Systems for High Voltage

Dr.M.Sangeetha[1], Mr.A.Muhammad Aleem[2], Mr.G.Purushothaman[3]

Professor, PG student, Assistant Professor
PG student Electrical and Electronics Engineering,
MAM SCHOOL OF ENGINEERING

Abstract: The development of advanced power electronic equipment used to support optimized operations and efficient management of electrical grids, many of which are fully or partially deregulated networks, continues to be significantly influenced by the ever-increasing progress of high-voltage high-power fully-controlled semiconductor technology. Both the flexible alternating current transmission system (FACTS) and the high-voltage direct-current (HVDC) power transmission technologies advance as a result of developments. An overview of current developments in the field of voltage-source converter (VSC) HVDC technology is given in this study. The topologies of a few important multilevel converters are presented. Methods for modeling and control are discussed. Worldwide installations of VSC-based HVDC are listed. It is established that the utilities may take use of cost-effective opportunities provided by the power electronics industry's ongoing development, and HVDC continues to be a crucial technology. In particular, VSC-HVDC can handle specialised markets like the grid integration of large-scale renewable energy sources in addition to more mainstream network challenges like bulk power transmission, asynchronous network interconnections, back-to-back AC system connecting, and voltage/stability support.

INTRODUCTION

High-voltage direct-current (HVDC) power transmission systems and technologies associated with the flexible alternating current transmission System (FACTS) continue to advance as they make their way to commercial applications [1]-[25]. Both HVDC and FACTS systems underwent research and development for many years and they were based initially on thyristor technology and more recently on fully-controlled semiconductors and voltage-source converter (VSC) topologies [1]-[25]. The ever increasing penetration of the power electronics technologies into the power systems is mainly due to the continuous progress of the high-voltage high-power fully-controlled semiconductors.

The fully-controlled semiconductor devices available today for high-voltage high-power converters can be either thyristors or transistors. These devices can be used for a VSC with pulse-width modulation (PWM), operating at frequencies higher than the line frequency (Table 1) and are self-commuted via a gate pulse.

Typically, it is desirable that a VSC application generates PWM waveforms of higher frequency when compared to the thyristor-based systems. However, the operating frequency of these devices is also determined by the losses and the design of the heat sink, both of which are related to the power through the component. Switching losses, directly linked to high frequency PWM operation, are one of the most serious issues that need to be dealt with in VSC-based applications.

HVDC and FACTS systems are important technologies, supporting in their own way the modern power systems, which in many cases are fully partially deregulated in several countries. In the near future, even higher integration of electrical grids and market driven developments are expected as, for instance, countries in the Middle-East, China, India and South America require infrastructure to power their growth. Today, there are more than 92 HVDC projects worldwide transmitting more than 75GW of power employing two distinct technologies as follows.

1. Line-commutated current-source converters (CSCs) using thyristors (Fig. 1, CSC-HVDC). This technology is well established for high power, typically around 1000MW, with the largest project being the Itaipu system in Brazil at 6300MW power level [24].
2. Forced-commutated voltage-source converters (VSCs) using gate-turn-off thyristors (GTOs) or in most industrial cases insulated gate bipolar transistors (IGBTs) (Fig. 2, VSC-HVDC). It is well established technology for medium power levels thus far, with the largest size project being the latest one named Estlink at 350MW level.

   CSC-HVDC systems represent mature technology today (i.e., also referred to as “classic” HVDC) and recently, there have been a number of significant advances.

Table 1: Summary of fully-controlled high-power semiconductors

Acronym	Type	Full Name
IGBT	Transistor	Insulated Gate Bipolar Transistor
IEGT	Transistor	Injection Enhanced Gate Transistor
GTO	Thyristor	Gate Turn-off Thyristor
IGCT	Thyristor	Integrated Gate Commutated Thyristor

GCT	Thyristor	Gate Commutated Turn-off Thyristor

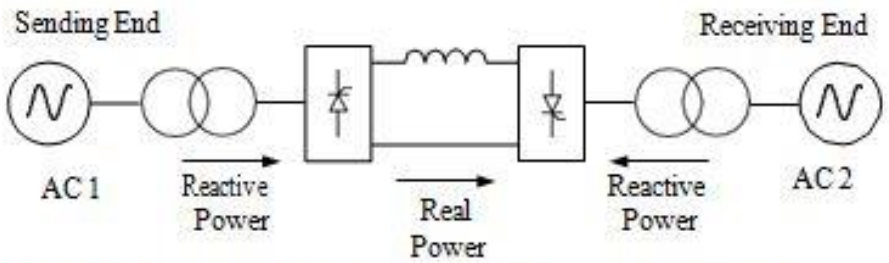

Fig. 1: HVDC system based on CSC technology with thrusters.

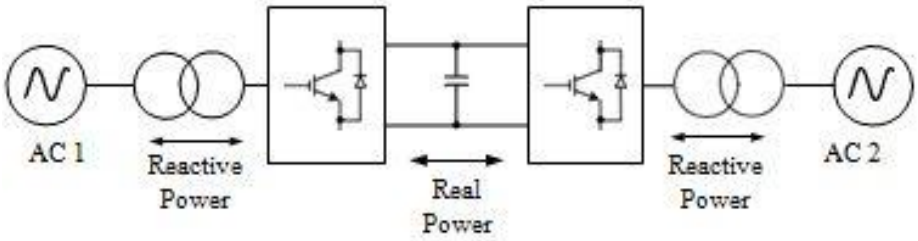

Fig. 2: HVDC system based on VSC technology built with IGBTs.

It is beyond the scope of this paper to discuss developments associated with the CSC-HVDC which are well-documented. On the other hand, VSC-HVDC systems (i.e., also referred to as HVDC Light® [21]) represent recent developments in the area of DC power transmission technology. Experience with VSC-HVDC at commercial level scatters over the last ten 15 years, . The breakthrough was made when the world's first VSC-based PWM controlled HVDC system using IGBTs was installed in May 1992 by ABB (Helljsön project, Sweden, 3MW, 10km distance, ±10kV, the only project where overhead lines were used) Since then, more VSC-HVDC systems have been installed worldwide (Table 2) [18]. Other relevant and important developments that assisted the success of VSC-HVDC (i.e., HVDC Light®), which are worth mentioning involve advanced extruded DC cable technology [15] The objective of this paper is to provide an overview of the HVDC technologies associated with VSC-based systems including converter topologies. Modeling and control is another area of importance and recent contributions presented in the technical literature are analyzed briefly. Finally, emerging applications of VSC-HVDC systems and multi terminal DC configurations that can be used to interconnect large scale wind energy sources with the grid are discussed.

The paper is organized in the following way. Section II provides a summary of the CSC-HVDC system configurations, which also apply, with some modifications, to the VSC-HVDC ones as well. Section III discusses in detail the fundamental concepts associated with the VSC-HVDC system. The various multilevel converter topologies suitable for VSC-HVDC are briefly presented in Section IV. Modeling and control issues are analyzed in Section V. Emerging applications involving the integration of large scale wind energy systems are presented in Section VI. The various worldwide VSC-HVDC installations are summarized in Section VII. Finally, the paper concludes in Section VIII.

I. HVDC SYSTEM CONFIGURATIONS

Depending upon the function and location of the converter stations, various configurations of HVDC systems can be identified. The ones drawn in this section involve CSC-HVDC configurations but similar types of configurations exist for VSC-HVDC with or without transformers depending upon the project in question.

A. Back-to-back HVDC system.

In this case, the two converter stations are located at the same site and there is no transmission of power with a DC link over a long distance. A block diagram of a back-to-back CSC-HVDC system with 12-pulse converters is shown in Fig. 3. The two AC systems interconnected may have the same or different frequency (asynchronous interconnection).

A. Monopolar HVDC system.

In this configuration, two converters are used which are separated by a single pole line and a positive or a negative DC voltage is used. Many of the cable transmissions with submarine connections use monopolar system. The ground is used to return current. Fig. 4 shows a block diagram of a monopolar CSC-HVDC system with 12-pulse converters.

B. Bipolar HVDC system.

This is the most commonly used configuration of a CSC-HVDC system in applications where overhead lines are used to transmit power. In fact, the bipolar system is two monopolar systems.

The advantage of such system is that one pole can continue to transmit power in the case that the other one is out of service for whatever reason. In other words, each system can operate on its own as an independent system with the earth return. Since one is positive and one is negative, in case that both poles have equal currents, the ground current is zero theoretically, or in practice within a 1% difference. The 12-pulse based bipolar CSC-HVDC system is depicted in Fig. 5.

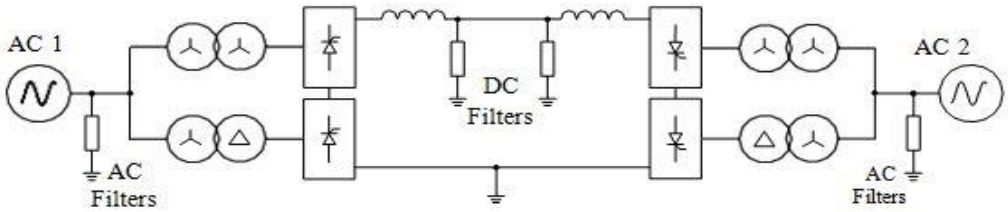

Fig. 3: Back-to-back CSC-HVDC system with 12-pulse converters.

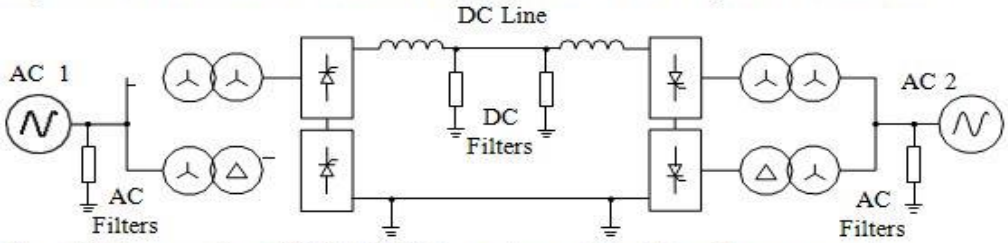

Fig. 4: Monopolar CSC-HVDC system with 12-pulse converters.

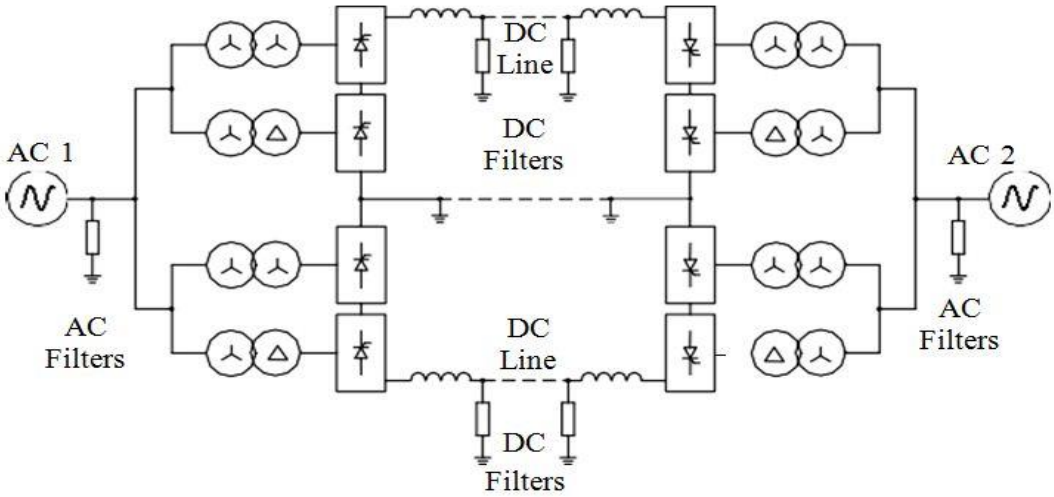

Fig.5: Bipolar CSC-HVDC system with one 12-pulse converter per pole.

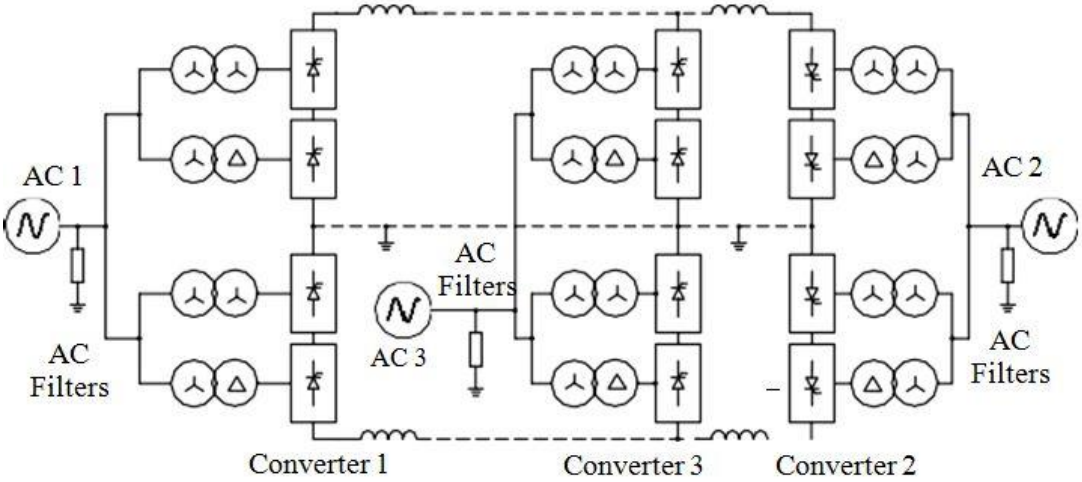

Fig. 6: Multi-terminal CSC-HVDC system – parallel connected.

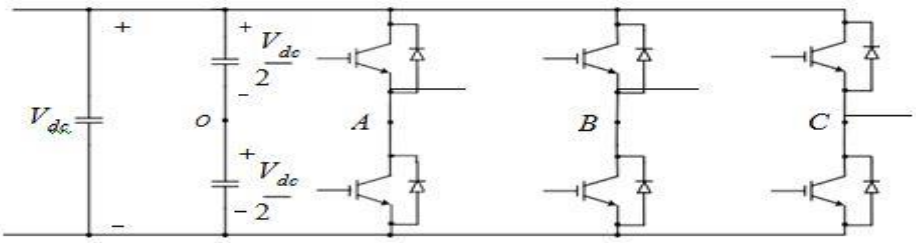

Fig. 7: Conventional two-level VSC three-phase topology.

C. Multi-terminal HVDC system.

In this configuration there are more than two sets of converters like the bipolar version. In this case, converters 1 and 3 can operate as rectifiers while converter 2 operates as an inverter. Working in the other order, converter 2 can operate as a rectifier and converters 1 and 3 as inverters. By mechanically switching the connections of a given converter other combinations can be achieved. A multi-terminal CSC-HVDC system with 12-pulse converters per pole is shown in Fig. 6.

II. VSC-HVDC FUNDAMENTAL CONCEPTS

A basic VSC-HVDC system comprises of two converter stations built with VSC topologies (Fig. 2). The simplest VSC topology is the conventional two-level three-phase bridge shown in Fig. 7. Typically, many series connected IGBTs are used for each semiconductor shown (Fig. 7) in order to deliver a higher blocking voltage capability for the converter and therefore increase the DC bus voltage level of the HVDC system. It should be noted that an anti parallel diode is also Needed in order to ensure the four-quadrant operation of the converter. The DC bus capacitor provides the required storage of the energy so that the power flow can be controlled and offers filtering for the DC harmonics. The VSC-HVDC system can be built with many VSC topologies and the key ones are presented in Section IV.

The converter is typically controlled through sinusoidal PWM (SPWM) and the harmonics are directly associated with the switching frequency of each converter leg. Fig. 8 presents the basic waveforms associated with SPWM and the line-to-neutral voltage waveform of the two-level converter (Fig. 7). Each phase-leg of the converter is connected through a reactor to the AC system. Filters are also included on the AC side to further reduce the harmonic content flowing into the AC system.

A generalized two AC voltage sources connected via a reactor is shown in Fig. 9. Fig. 10 shows the relative location of the vectors of the two AC quantities and their relationship through the voltage drop across the line reactor (Fig. 9). One vector is generated by the VSC and the other one is the vector of the AC system. At the fundamental frequency the active and reactive powers are Defined by the following relationships, assuming the
Reactor between the converter and the AC system is ideal (i.e. lossless):

$$P = \frac{V_s \sin\delta}{X_L} \cdot V_r \qquad (1)$$

$$Q = \frac{V_s \cos\delta - V_r}{X_L} \cdot V_r \qquad (2)$$

Where *is* the phase angle between the voltage vectors V_S (sending) and V_r (Receiving) at the fundamental Frequency.

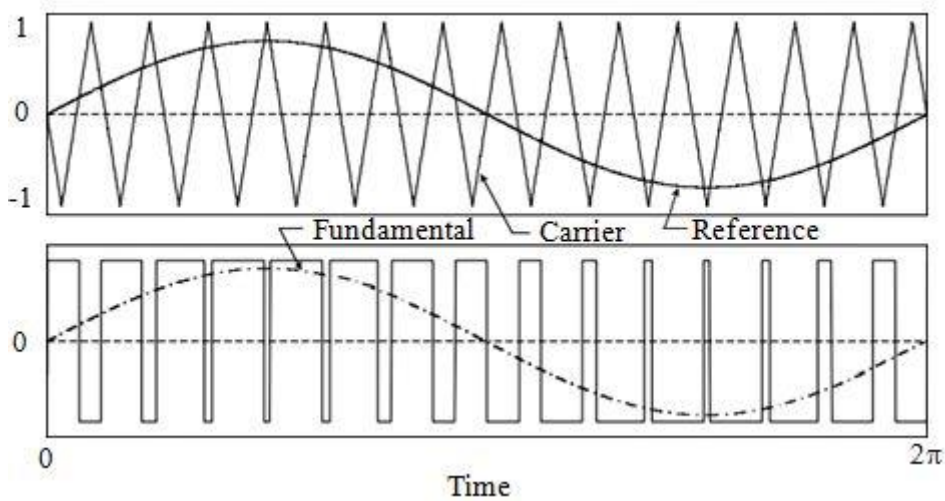

Fig. 8: Two-level sinusoidal PWM method: reference (sinusoidal) and carrier (triangular) signals and line-to-neutral voltage waveform.

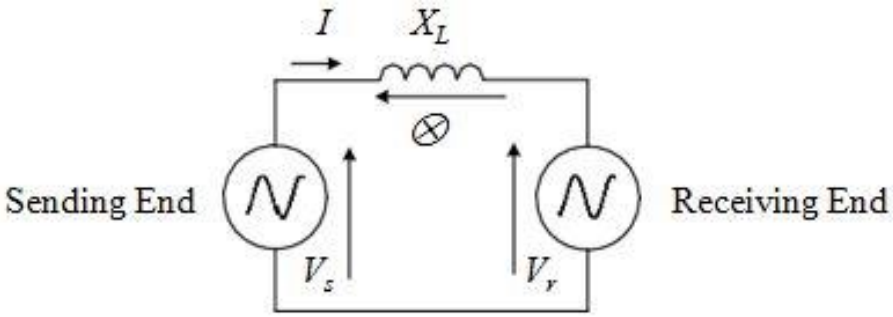

Fig. 9: Interconnection of two AC voltage sources through a lossless reactor.

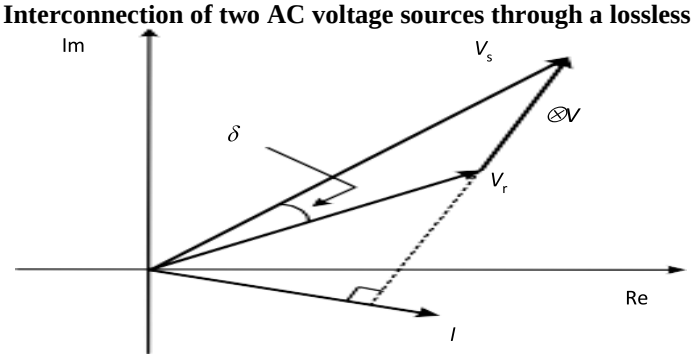

Fig. 10: Vector diagram of power transmission based on two AC voltage sources interconnected through a lossless reactor.

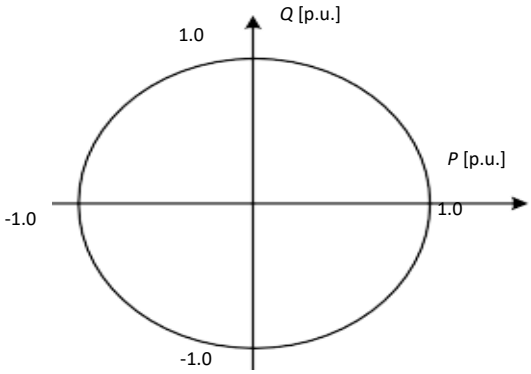

Fig. 11: Active-reactive (*PQ*) locus diagram of VSC-based power transmission system.

Fig. 11 shows the entire active-reactive power area where the VSC can be operated with the 1.0 p.u. value being the MVA rating of each converter.

The use of VSC as opposed to a line commutated CSC offers the following advantages:

- Avoidance of commutation failures due to disturbances in the AC network.
- Independent control of the reactive and active power consumed or generated by the converter.
- Possibility to connect the VSC-HVDC system to a "weak" AC network or even to one where no generation source is available and naturally the short-circuit level is very low.
- Faster dynamic response due to higher (PWM) than the fundamental switching frequency (phase-controlled) operation, which further results in reduced need for filtering and hence smaller filter size.
- No need of transformers for the conversion process.

III. MULTILEVEL VSC TOPOLOGIES FOR HVDC

In this Section, different selected VSC topologies suitable for the implementation of a VSC-HVDC system are discussed. Multilevel converters extend the well-known advantages of low and medium power PWM converter technology into the high power applications suitable for high-voltage high-power adjustable speed drives and large converters for power systems through FACTS and VSC-based HVDC power transmission. There are numerous multilevel solid-state converter topologies reported in the technical literature. However, there are two distinct topologies, namely, the

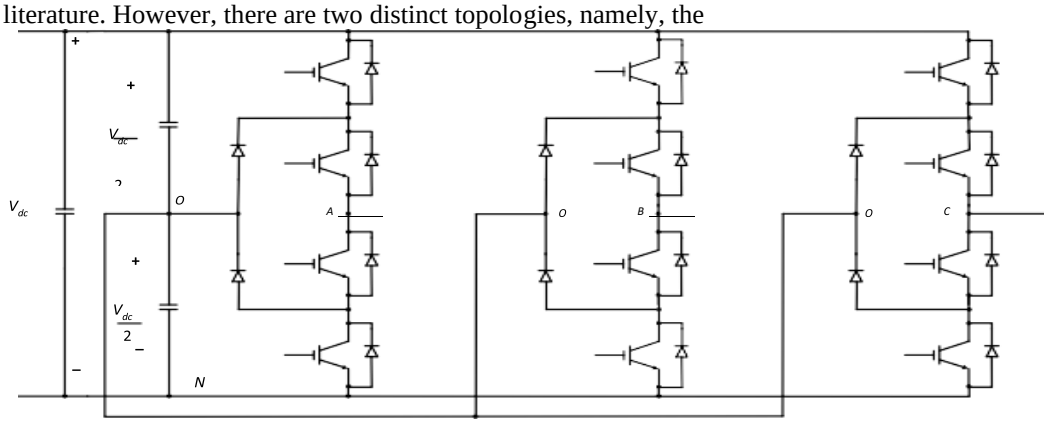

Fig. 12: Three-level three-phase neutral-point-clamped (NPC-diode clamped) VSC.

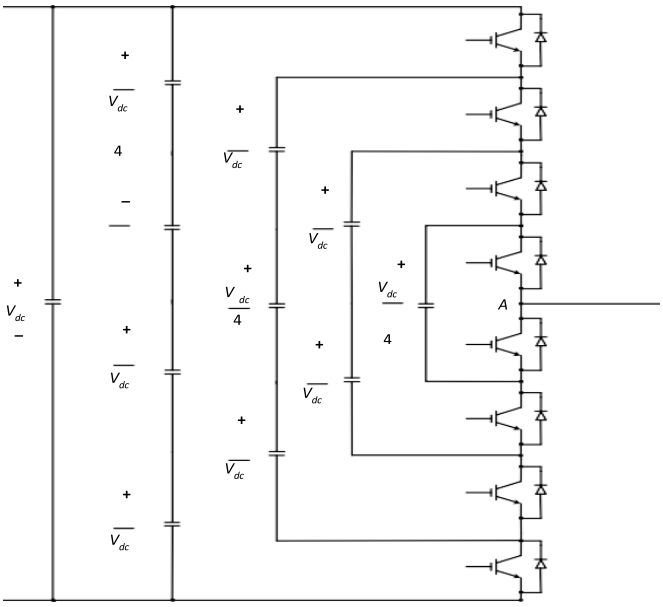

Fig. 13: Five-level flying capacitor VSC phases leg topology.

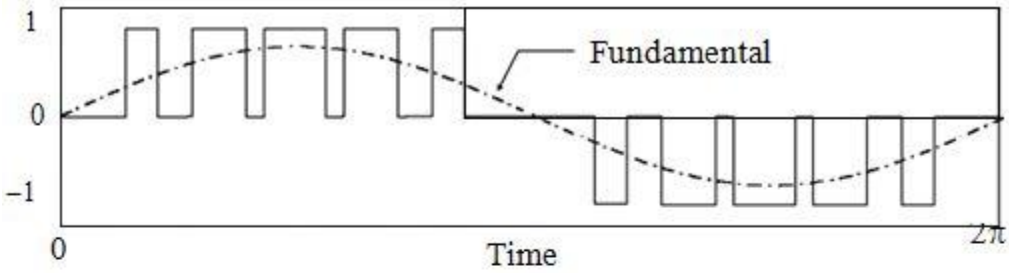

Fig. 14: Three-level PWM line-to-neutral voltage waveform.

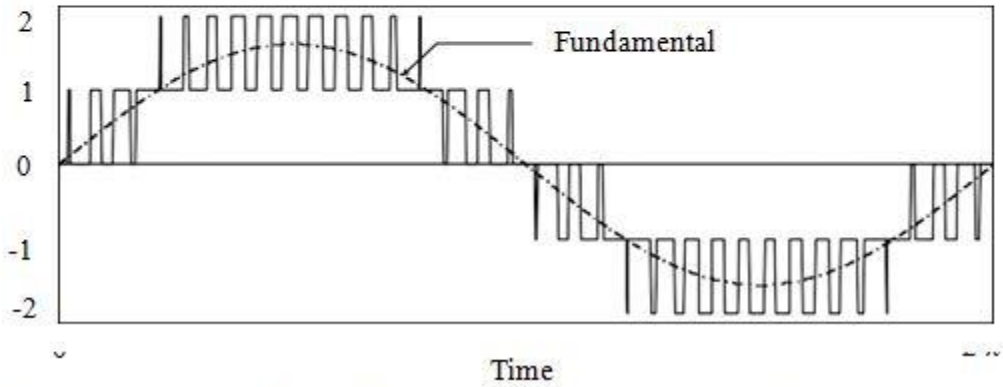

Fig. 15: Five-level PWM line-to-neutral voltage waveform.

Diode-clamped neutral-point-clamped (NPC) converter (Fig. 12) and the flying capacitor (FC) VSC topology (Fig. 13). For clarity purposes, three- and five-level PWM voltage waveforms on the line-to-neutral basis are shown in Figs. 14 and 15 respectively.

Contributions for selected topologies which can be used to build an HVDC system were made in numerous technical. Specifically, PWM controlled HVDC concepts based on the three-phase two-level converter were reported using GTO's. A similar system was developed and reported using IGBTs and digital signal processing (DSP) control. Using modular approach and phase-shifted SPWM concepts a number of advantages can be gained as far as the harmonic performance of the overall VSC-HVDC system are concerned the diode-clamped NPC topology was studied for an HVDC system in its three-level version (Fig. 12). The benefits of using such a system were brought out; however the converter has significant challenges with voltage balancing across the various DC bus capacitors, in addition to the uneven loss distribution between the devices. A VSC-HVDC system based on the five-level PWM flying capacitor (FC) topology was studied in (Fig. 13). The three basic topologies, namely, the two-level converter (Fig. 7), the NPC converter (Fig. 12) and the FC converter (Fig. 13) were compared for HVDC system a hybrid system is proposed as a way to exploit the benefits of both technologies, i.e., the CSC-based HVDC and VSC-based static compensator (STATCOM) advantages used as a static compensator for the connection of two AC systems when there is no synchronous generation to a main grid. The proposed system is shown in Fig. 16. The system studied through simulations combines the robust performance and relatively lower capital cost and operating loss through the low frequency switching with the fast dynamic response of a PWM controlled VSC STATCOM which is sized at a lot lower power level when compared with the main CSC system. The multilevel

FC topology and its operation under fault AC conditions was discussed The FC VSC-based HVDC controlled with selective harmonic elimination (SHE) and a hybrid SHE and SPWM strategy were presented in and respectively. VSC transmission topologies based on the multi-level current/voltage reinjection.

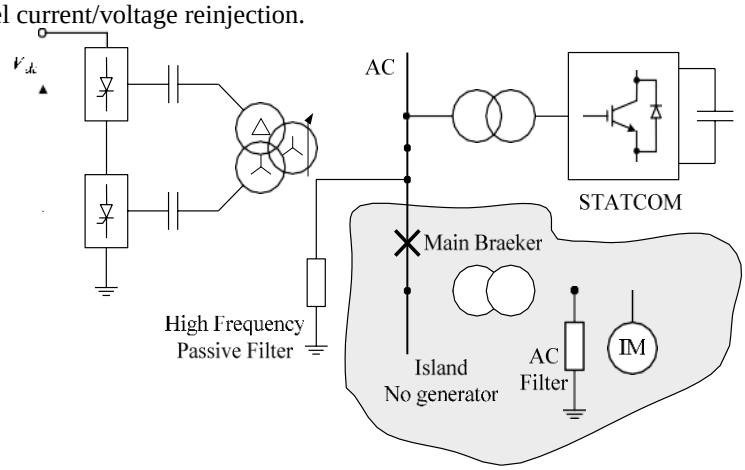

Fig. 16: Hybrid CSC-based HVDC combined with VSC-based STATCOM.

IV. MODELLING AND CONTROL

On the modeling and control area associated with VSC-HVDC systems, there have been several technical papers as well and such information is not limited shown that including a back-to-back VSC-HVDC system at the mid-point of a transmission line can increase the transmissibility of the line by a factor of it is shown that the VSC-HVDC system can be operated as a static synchronous series compensator (SSSC). Using equivalent continuous-time state-space average modeling a DC bus voltage control system was presented in [80]. Recently, a dynamic model for a back-to-back HVDC system based on the three-level NPC topology was presented in [11]. Finally, in [12] a control system for the VSC-HVDC during island operation and under three-phase balanced faults was investigated and it has been found that the current limit of the converters has a significant influence on the dynamic response of the system.

V. EMERGING APPLICATIONS

VSC-HVDC can be effectively used in a number of key areas as follows,

- Small, isolated remote loads.
- Power supply to islands.
- Infeed to city centres.
- Remote small-scale generation.
- Off-shore generation and deep sea crossings.
- Multi-terminal systems.

As a way of example, a five-terminal VSC-HVDC [19] and a multi-terminal configuration [13] are shown in Figs. 17 and 18 respectively.

From the technology point of view, wind farms and off-shore wind farms in particular are well-suited for VSC-HVDC application [14], [15]. The discussion continues as to if the DC is more cost-effective to the AC counterpart as a means to connect wind farms with the main grid [16].

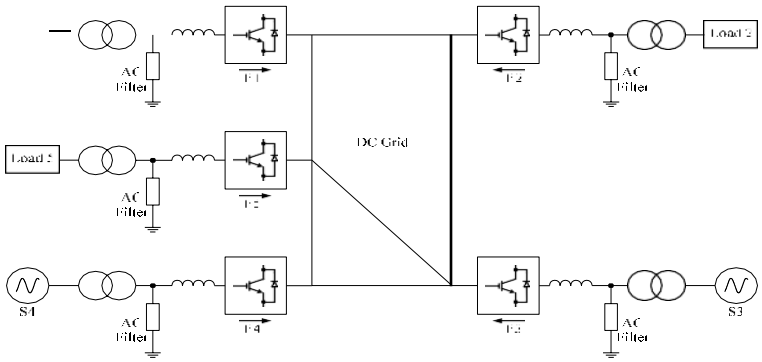

Fig. 17: Five-terminal VSC-HVDC system.

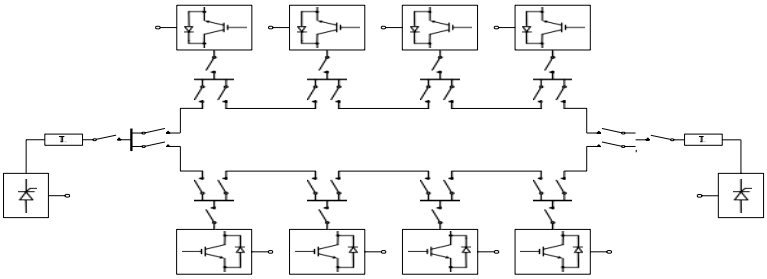

Fig. 18: Single-line multi-terminal VSC-HVDC system.

Multi-terminal DC systems have been studied for wind farm Fig. 19 presents a scenario of three wind generators connected into a multi-terminal DC grid via a VSC. A single VSC-HVDC transmits the power and/or connects the entire farm with the grid.

Finally, the use of doubly-fed induction generators (DFIGs) for wind farm development and the relation to an HVDC interconnection and coordinated control is one of the most current research developments in the field [90], [91].

VI. VSC-HVDC WORLDWIDE INSTALLATIONS

In this section, the various projects worldwide where VSC-based HVDC systems have been successfully exploited are discussed. The projects have been designed and delivered by ABB [38] and are summarised in Table 2. They involve back-to-back systems (Eagle Pass, USA), wind energy applications (Götland, Sweden), two controlled asynchronous connections for trading of electricity (Murray link and Directlink, Australia), power enhancement (CrossSound link, USA) and the powering of an off-shore platform (Troll A, Norway). It should be noted that the DC voltage has reached ±150kV and the largest system is at 350MW, making the VSC-HVDC a well established technology in the medium power levels. Moreover, the experiences gained from the projects so far ensure that VSC-HVDC technology remains competitive and assists utilities worldwide in order to deliver efficient, reliable, economic, and where possible renewable energy to customers irrespective of how challenging the applications.

VIII. CONCLUSIONS

Recent developments in the VSC-HVDC technology are discussed in this paper. High-voltage, high-power semiconductors have made it easier for utilities to take use of the four-quadrant static converter's ability to connect two AC systems via HVDC. The ability to connect AC islands with the grid where there is no synchronous generation, quick dynamic response, and independent control of active and reactive power through the converter's PWM control are the main advantages. Appears to exist. It has been established that advancements in VSC-HVDC technology have produced systems with voltages up to 150kV and powers up to 350MW. Without a doubt, VSC-HVDC will continue to offer answers for a variety of complex problems related to today's deregulated electricity networks, where installations and related business considerations call for tesedtechnol.

IX. REFERENCES

1. K.R. Padiyar, “HVDC power transmission systems: technology and system interactions”, *J. Wiley & Sons Inc.,* ISBN: 0470217065, September 1991.
2. J. Arrillaga, “High voltage direct current transmission”, *Institution of Electrical Engineers,* ISBN: 0852969414, October 1998.
3. Y.H. Song and A.T Johns, “Flexible AC transmission systems (FACTS)”, *Institution of Electrical Engineers,* ISBN: 0852967713, November 1999.
4. N.G. Hingorani and L. Gyugyi, “Understanding FACTS: concepts and technology of flexible AC transmission systems”, *J. Wiley & Sons Inc.,* ISBN: 0780334558, February 2000.
5. E. Acha, V.G. Agelidis, O. Anaya-Lara and T.J.E. Miller, “Power electronic control in electrical systems”, *Butterworth-Heinemann,* ISBN: 0750651261, January 2002.
6. R.M. Mathur and R.K. Varma, “Thyristor-based FACTS controllers for electrical transmission systems”, *J. Wiley & Sons Inc.,* ISBN: 0471206431, February 2002.
7. V.K. Sood, “HVDC and FACTS controllers: applications of static converters in power systems”, *Kluwer Academic Publishers,* ISBN: 1402078900, 2004.
8. L. Gyugyi, “Reactive power generation and control by thyristor circuits”, *IEEE Trans. on Industry Applications,* v IA-15, n 5, Sep.-Oct. 1979, p 521-532.
9. L. Gyugyi, “Control of shunt compensation with reference to new design concepts”, *IEE Proceedings, Part C: Generation, Transmission and Distribution,* v 128, n 6, Nov. 1981, p 374-381.
10. L. Gyugyi, “Power electronics in electric utilities: static VAR compensators”, *Proceedings of the IEEE,* v 76, n 4, Apr. 1988, p. 483-494.
11. N.G. Hingorani, “Power electronics in electric utilities: role of power electronics in future power systems”, *Proceedings of the IEEE,* v 76, n 4, April 1988, p. 481-482.
12. L. Gyugyi, “Unified power-flow control concept for flexible AC transmission systems”, *IEE Proceedings, Part C: Generation, Transmission and Distribution,* v 139, n 4, July 1992, p. 323-331.
13. N.G. Hingorani, “Flexible AC transmission”, *IEEE Spectrum,* v 30, n 4, April 1993, p. 40-45.
14. N.G. Hingorani and K.E. Stahlkopf, “High-power electronics”, Scientific American, v 269, n 5, November 1993, p. 52-59.
15. N.G. Hingorani, “FACTS technology and opportunities”, *IEE Colloquium on `Flexible AC Transmission Systems (FACTS) - The Key to Increased Utilisation of Power Systems' (Digest No.1994/005),* 1994, p 4/1-10.

16. L. Gyugyi, "Dynamic compensation of AC transmission lines by solid-state synchronous voltage sources", *IEEE Trans. on Power Delivery*, v 9, n 2, April 1994, p. 904-911.
17. N.G. Hingorani, "Future role of power electronics in power systems", *Proc. of IEEE International Symposium on Power Semiconductor Devices & ICs (ISPSD) 1995*, p 13-15.
18. N.G. Hingorani, "High-voltage DC transmission: a power electronics workhorse", *IEEE Spectrum*, v 33, 4, April 1996, p. 63-72.
19. R. Grunbaum, M. Noroozian and B. Thorvaldsson, "FACTS - Powerful systems for flexible power transmission", *ABB Review*, n 5, 1999, p 4-17.
20. N.G. Hingorani, "Future directions for power electronics", *Proc. of IEEE PES Transmission and Distribution Conference*, v 2, 2001, p. 1180-1181.
21. A. A. Edris, S. Zelingher, L. Gyugyi and L.J. Kovalsky, "Squeezing more power from the grid", *IEEE Power Engineering Review*, v 22, n 6, 2002, p 4-6.
22. D. Povh, "Use of HVDC and FACTS", *Proceedings of the IEEE*, v 88, n 2, 2000, p. 235-245.
23. E.I. Carroll, "Power electronics for very high power applications", *ABB Review*, n 2, 1999, p 4-11.
24. H. Akagi, "Large static converters for industry and utility applications", *Proceedings of the IEEE*, v 89, n 6, June 2001, p. 976-983.

Table 2: Summary of worldwide VSC-HVDC projects and their basic parameters [38].

Project Name	Commissioning year	Power rating	Number of circuits	AC voltage	DC voltage	Length of DC cables	Comments and reasons for choosing VSC-HVDC
Hällsjön, Sweden	1997	3 MW	1	10 kV (both ends)	± 10 kV	10 km Overhead lines	Test transmission. Only project where overhead lines were used.
Gotland HVDC light, Sweden	1999	50 MW	1	80 kV (both ends)	± 80 kV	2 × 70 km Submarine cables	Wind power (voltage support). Easy to get permission for underground cables.
Eagle Pass, USA	2000	36MW	1	132 kV (both sides)	± 15.9 kV		Controlled asynchronous connection for trading. Voltage control. Back-to-back HVDC light station
Tjaereborg, Denmark	2000	8 MVA 7.2 MW	1	10.5 kV (both sides)	± 9 kV	4 × 4.3 km Submarine cables	Wind power. Demonstration project.
DirectLink, Australia	2000	180 MW	3	110 kV (Bungalora) 132 kV (Mullumbim by)	± 80 kV	6 × 59 km Underground cable	Controlled asynchronous connection for trading. Easy to get permission for underground cables.
MurrayLink, Australia	2002	220 MW	1	132 kV (Berri) 220 kV (Red Cliffs)	± 150 kV	2 × 180 km Underground cable	Controlled asynchronous connection for trading. Easy to get permission for underground cables.
CrossSound, USA	2002	330 MW	1	345 kV (New Heaven) 138 kV (Shoreham)	± 150 kV	2 × 40 km Submarine cables	Controlled connections for power enhance. Submarine cables.
Troll offshore, Norway	2005	84 MW	2	132 kV (Kollsnes) 56 kV (Troll)	± 60 kV	4 × 70 km Submarine cables	Environment, long submarine cable distance, compactness of converter on platform.
Estlink, Estonia Finland	2006	350 MW	1	330 kV (Estonia) 400 kV (Finland)	± 150 kV	2 × 31 km Underground 2 × 74 km Submarine	Length of land cable, sea crossing and non-synchronous AC systems.
Valhall offshore, Norway	2009	78 MW	1	300 kV (Lista) 11 kV (Valhall)	150 kV	292 km Submarine cables	Reduce cost and improve operation efficiency of the field. Minimize emission of green house gases.